GENERAL NOTES - STRUCTURAL

1. The contractor shall verify dimensions and conditions before construction and notify the engineer of any discrepancies, inconsistencies, or difficulties affecting the work before proceeding.

2. The contractor shall coordinate all disciplines, verifying size and location of all openings, whether shown on structural drawings or not, as called for on architectural, mechanical, or electrical drawings. All conflicts, inconsistencies, or other difficulties affecting structural work shall be called to the architect or engineer's attention for direction before proceeding.

3. All design and construction work for this project shall conform to the requirements of the 2018 International Building Code, as amended by the City of Steamboat Springs, Colorado.

4. These drawings are for this specific project and no other use is authorized.

5. Structural Design Load Criteria:
   - A. Dead Load:
     - Roofs = 20 psf
   - B. Live Load:
     - Roofs = 100 psf
     - Floors = 40 psf
     - Maintenance Platform = 40 psf
   - C. Snow Load: 100 psf
   - D. Lateral Loads:
     - 1.) Wind V = 115 mph, exposure B, GCpi = +/- 1.08
       Design wind pressures to be used for the delsgn of exterior components and cladding materials on the designated zones of walls and roof structures shall be per Section 30.7.1 and Table 30.7-2 of ASCE/SEI 7-10. Tabulated pressures shall be multiplied by effective are reduction factors, exposure adjustment factors, and topographic factors where applicable.
     - 2.) Seismic Ss = 0.167, S1 = 0.056, IE = 1.0
       Site Classification D (Assumed).
       Seismic Design Category B.
       Basic Seismic Force-Resisting System:
       A.1.7- Light-Framed Walls with Shear Panels of All Other Materials
       R=2, Omega = 2 1/2, Cd = 2, V= 0.084*W
   - E. This project is designed to resist the most critical effects resulting from the load combinations of section 1605.3 of the 2018 International Building Code.

6. Concrete:
   - A. All concrete for foundations (walls, grade beams, and footings) shall develop minimum ultimate compressive design strength of 3500 psi in 28 days, but not less than 500 pounds of cement shall be used per cubic yard of concrete regardless of strengths obtained, not over 6 gallons of water per 100 pounds of cement and not over 4 inches of slump.
   - B. All concrete for interior flat work shall develop minimum ultimate compressive design strength of 4000 psi in 28 days, but not less than 560 pounds of cement shall be used per cubic yard of concrete regardless of strengths obtained, not over 5 gallons of water per 100 pounds of cement and not over 4 inches of slump.
   - C. Concrete for exterior flatwork shall have a minimum design compressive strength of 4500 psi in 28 days, with not less than 560 pounds of cement per cubic yard of concrete, not over 5 gallons of water per 100 pounds of cement, with 6% +/- 1% air entrainment, and a maximum of 4 inches of slump.
   - D. The preceding minimum mix requirements may have water-reducing admixtures conforming to ASTM C494 added to the mix at manufacturer's dosage rates for improved workability.
   - E. The preceding minimum mix requirements may have up to 15% maximum of the cement content replaced with an approved ASTM C618 Class C fly ash, provided the total minimum cementitious content is not reduced.
   - F. All concrete is reinforced concrete unless specifically called out as unreinforced. Reinforce all concrete not otherwise shown with same steel as in similar sections or areas. Any details not shown shall be detailed per ACI 315 and meet requirements of ACI 318, current editions.
   - G. Contractor shall verify that all concrete inserts, reinforcing and embedded items are correctly located and rigidly secured prior to concrete placement.
   - H. Construction joints in beams, slabs, and grade beams shall occur at midspan (middle third) unless noted otherwise. Provide 2 x 4 horizontal keys at construction joints for shear transfer.
   - I. No aluminum items shall be embedded in any concrete.

7. Reinforcing Steel:
   - A. All reinforcing steel shall conform to the requirements of ASTM A615 or A706 grade 60 steel. Welded plain wire fabric shall be supplied in sheets and conform to the requirements of ASTM A185.
   - B. Clear minimum coverage of concrete over reinforcing steel shall be as follows:
     - Concrete placed against earth 3"
     - Formed concrete against earth 2"
     - Slabs 1"
     - Other 2"

     All coverage shall be nominal bar diameter minimum.
   - C. All dowels shall be the same size and spacing as adjoining main bars (splice lap 48 bar diameters or 30" minimum unless noted otherwise).
   - D. At corners of all walls, beams, and grade beams supply corner bars (minimum 2'-6" in each direction or 48 bar diameters) in outside face of wall, matching size and spacing of horizontal bars. Where there are no vertical bars in outside face of wall, supply 3 - #4 vertical support bars for corner bars.
   - E. Bars marked continous shall be lapped 48 bar diameters (3'-0" minimum) at splices and embedments, unless shown otherwise. Splice top bars near midspan and splice bottom bars over supports, unless noted otherwise.
   - F. Accessories shall be as specified in latest edition of the ACI Detailing Handbook and the concrete Reinforcing Steel Institute Design Handbook. Maximum accessory spacing shall be 4'-0" on center, and all accessories on exposed surfaces are to have plastic coated feet.
   - G. All slabs and stairs not shown otherwise shall be 6" thick with #4 bars at 12" on center each way.

8. Structural Steel:
   - A. All structural steel beams and columns shall be ASTM A992, grade 50 steel and all miscellaneous steel shall be ASTM A36 grade steel. Hollow Structural Sections (HSS) shall be ASTM A500, grade B. Fabrication and erection shall be in accordance with AISC 303-05 "Code of Standard Practice for Steel Buildings and Bridges" in the 13th Edition of the AISC Steel Construction Manual.
   - B. All welding shall conform to the recommendations of the AWS.
   - C. All bolts not otherwise specified shall be 3/4" diameter high strength (ASTM A325-N). All bolts shall be fully pretensioned. All beam connections shall be designed per the AISC Manual of Steel Construction "Framed Beam Connections" for 40 kip reactions, and shall account for eccentricity when the bolt line is more than 2" from the center of the support. All connections must be two bolt minimum.

9. Anchor bolts shall be 3/4" diameter, ASTM F1554, Grade 36 unless noted otherwise.
   - A. The soil investigation was prepared by NorthWest Colorado Consulants, the report number is 20-11831 and their telephone number is 970-879-7888.
   - B. Spread footings and continuous wall footings are designed to bear on soil capable of safely sustaining 2500 psf.
   - C. Contractor shall provide for dewatering at excavations from either surface water or seepage.
   - D. All foundation excavations shall be inspected by a qualified soil engineer, approved by the architect and/or structural engineer, prior to placement of steel or concrete. This inspection shall be at the owner's expense.
   - E. Moisture content in soils beneath building locations should not be allowed to change after footing excavations and after grading for slabs on grade are completed. If subgrade materials become desiccated or softened by water or other conditions, recompact materials to the density and water content specified for engineered fill. Do not place concrete on frozen ground.

10. Concrete Block Masonry
    - A. Concrete block used in exterior walls or load bearing walls shall meet the requirements of ASTM C90 and have a minimum net compressive strength of 2150 psi and laid up using type N mortar such that f'm equals 1500 psi. Mortar shall be volume proportion based cement lime mortar. Proportioning shall be completed by box measure. Any block in contact with earth shall be normal weight units, laid using type "S" mortar and grouted solid.
    - B. The contractor shall provide adequate temporary bracing for all masonry walls during construction.
    - C. All concrete block shall have 9 gage (or larger) horizontal joint reinforcing (ladder or truss) per architectural drawings and specifications (16" maximum vertical spacing).
    - D. Concrete block shall be reinforced as follows in 8" walls unless noted otherwise:
      - 1.) Vertical reinforcing shall be a minimum of 1 - #4 bar in 8" walls at 4'-0" on center, at each corner, at each door and window jamb, each side of control joints and in the end void of each length of wall. Lap splices for masonry vertical reinforcing shall be 48 bar diameters or 24" minimum.
      - 2.) Horizontal reinforcing:
        - A.) Horizontal joint reinforcing as noted above.
        - B.) Continuous horizontal bars shall be included per section or detail in bond beam or optional running bond beam where noted. Where bond beams are continuous at corners of walls, supply corner bars matching size of horizontal bars (minimum 2'-0" or 40 bar diameters in each direction).
    - E. Grout, where noted above, shall have a minimum design ultimate compressive strength of 2500 psi at 28 day test and 3/8" maximum aggregate size.
    - F. Lintels over all openings in walls not otherwise covered shall be an 8" x 8" bond beam with 2 - #6 bars in the bottom of the bond beam.

11. Post-Installed Anchors:
    - A. Post-installed anchors shall be used only where specified on the drawings unless approved in writing by the engineer of record. See drawings for anchor diameter, spacing and embedment. Performance values of the anchors shall be obtained for specified products using appropriate design procedures and/or standards as required by the governing building code. Anchors installed in concrete shall have an ICC-ES Evaluation Service Report. Special inspection is required for all post-installed anchors.
    - B. Mechanical anchors used in cracked and uncracked concrete shall have been tested and qualified for use in accordance with ACI 355.2 and ICC-ES AC193. All anchors shall be installed per the anchor manufacturer's written instructions.
    - C. Adhesive anchors used in cracked and uncracked concrete shall have been tested and qualified for use in accordance with ICC-ES AC308. All anchors shall be installed per the anchor manufacturer's written instructions.

12. Timber and Wood Framing:
    - A. Quality and construction of wood framing members and their fasteners for load supporting purposes not otherwise indicated on the drawings shall be in accordance with the 2018 International Building Code.
    - B. All studs and top and bottom plates shall be Douglas Fir No. 2 grade visually graded lumber, with an allowable fiber stress in bending of 400 psi minimum and an elastic modulus of 1,600,000 psi unless noted otherwise. All joist, truss members and headers to be No. 2 grade (min.) (unless noted otherwise).
    - C. Bridging of stud bearing walls and shear walls shall be solid, matching sheathing joints.
    - D. Joist blocking and bridging shall be solid wood or cross bridging of either wood or metal straps. Spacing, in any case, shall not exceed 8'-0".
    - E. Wood members and sheathing shall be fastened with number and size of fasteners not less than that set forth in Table 2304.9.1 of the 2018 International Building Code. Floor sheathing shall be APA rated tongue and groove Sturd-I-Floor, exposure 1, glued and nailed with 10d nails or # 10 screws at 6" on center to supports at edges and 12" on center field. Sheathing of shear walls or roof diaphragms shall be edge nailed with 8d common nails at 6" on center and nailed to intermediate framing and/or blocking members with 8d common nails at 12" on center unless otherwise noted on the drawings.
    - F. Sill plates shall be bolted to concrete slabs with ½" diameter bolts at 32" on center (UNO, Re: shearwall sched). Provide plate washers at sill plate anchors for shearwalls per shearwall sched. Plates in direct contact with concrete or masonry shall be treated lumber.
    - G. All hangers, ties and connections shown are based on Simpson Strong Tie as the basis of design, provide Simpson Strong Tie or an approved equal. Joist hangers shall be equal to "LUS" for wood application and "LS" for steel weld-on application. Roof truss ties shall be equal to "H2.5A" and tie the roof truss to the top plate (provide (2) "H2.5A" Diagonally across from each other when uplift load shown in truss shop submittal exceeds 600lbs). Roof girder ties shall be equal to a "LGT2", "LGT3" or "LGT4" tie (dependent on number of plies) and tie the truss girder to the top plate. Provide "H4" at the top of each stud to top track when the top track has roof truss attached.
    - H. Service condition - dry with moisture content at or below 19% in service.
    - I. Laminated strand lumber (LSL) shall have an allowable flexural stress (Fb) of 1,700 psi (reduced by size factor) and an elastic modulus (E) of 1,300,000 psi.
    - J. Laminated veneer lumber (LVL) shall have an allowable flexural stress (Fb) of 2,600 psi (reduced by size factor) and an elastic modulus (E) of 1,900,000 psi.
    - K. Parallel Strand Lumber (PSL) shall have an allowable flexural stress (Fb) of 2,900 psi (reduced by size factor) and an elastic modulus (E) of 2,000,000 psi. (E) = 2,200,000 psi for members > 18").
    - L. Pre-engineered wood trusses shall be designed in accordance with the Truss Plate Institute's national design standard for metal-plate connected wood truss construction (ANSI/TPI-1 latest edition). Trusses shall be designed and manufactured by an authorized member of the Wood Truss Council of America (WTCA). Truss design shall conform to specified codes, allowable stress increases, deflection limitations and other applicable criteria of the governing code.
    - M. Truss shop drawings showing complete erection and fabrication details and calculations (including connections) shall be submitted to the project architect / engineer for review prior to fabrication and/or erection. Calculations shall bear the seal of a professional engineer, registered in the state of the project location. Shop drawings shall also be submitted to the local government controlling agency when requested by that agency.
    - N. All trusses shall be securely braced both during erection and permanently, as indicated on the approved truss design drawings and in accordance with TPI's commentary and recommendations for handling, installing and bracing metal-plate connected wood trusses (HIB-91, booklet) and the latest edition of ANSI/TPI-1.
    - O. The truss manufacturer shall supply all hardware and fasteners for joining truss members together and fastening truss members to their supports. Metal connector plates shall be manufactured by a member of the Wood Truss Council of America (WTCA) and shall be 20 gauge minimum. Connector plates shall meet or exceed ASTM A653, grade 33, with ASTM A924 galvanized coating designation G60.
    - P. Provide truss space directly above and centered over HVAC closets. Refer to Architectural and MEP drawings for exact locations.
    - Q. Shipment, handling, and erection of trusses shall be by experienced, qualified persons and shall be performed in a manner so as not to endanger life or property. Apparent truss damage shall be reported to the truss manufacturer for evaluation prior to erection. Cutting or alteration of trusses is not permitted.
    - R. Pre-Engineered Floor Trusses Design Criteria:
      - Top Chord Dead Load = 30 psf
      - Top Chord Live Load = Per General Note 5B
      - Bottom Chord Dead Load = 10 psf
      - Live Load Deflection = L/480; (5" max)
      - Total Load Deflection = L/360
    - S. Roof Truss Design criteria:
      - Top Chord Dead Load = 10 psf
      - Top Chord Live Load = 100 psf
      - Top Chord Snow Load = 100 psf
      - Bottom Chord Dead Load = 10 psf
      - Bottom Chord Live Load = 5 psf
      - Live Load Deflection = L/360
      - Total Load Deflection = L/300
    - T. Roof trusses shall be designed per IBC 2018 for net uplift resulting from wind loading as calculated using components and cladding loading.
    - U. Construction bracing shall be provided by the contractor as required to keep the building and studs plumb.
    - V. Structural members shall not be cut for pipes, etc., unless specifically detailed. Notching and boring of studs and top of plates shall conform to the provisions of section 2308.9.10 and 2308.9.11 of the IBC. Where top plates or sole plates are cut for pipes, a metal tension tie with minimum 0.058 inches thick and 1½" inches wide shall be fastened to each plate across and to each side of the opening with not less than (6) 16d nails, in accordance section 2308.9.8 of the IBC.
    - W. All fasteners for wood to wood connections and wood connectors shall be as indicated in structural drawings or manufacturer literature to achieve full capacity of connector. Alternate fasteners may be submitted as a substitution request. Submittal must show that alternative fasteners will not reduce the capacity of the connection.

13. Shop Drawing Review:
    - A. Bob D. Campbell and Company, Inc. will review the General Contractor's (GC) shop drawings and related submittals (as indicated below) with respect to the ability of the detailed work, when complete, to be a properly functioning integral element of the overall structural system designed by Bob D. Campbell and Company, Inc.
    - B. Prior to submittal of a shop drawing or any related material to Bob D. Campbell and Company, Inc., the GC shall:
      - 1.) Review each submission for conformance with the means, methods, techniques, sequences and operations of construction and safety precautions and programs incidental thereto, all of which are the sole responsibility of the GC.
      - 2.) Review and approve each submission.
      - 3.) Stamp each submission as approved.
    - C. Bob D. Campbell and Company, Inc. shall assume that no submission comprises a variation unless the GC advises Bob D. Campbell and Company, Inc. with written documentation.
    - D. Shop drawings and related material (if any) required are indicated below. Should Bob D. Campbell and Company, Inc. require more than ten (10) working days to perform the review, Bob D. Campbell and Company, Inc. shall so notify the GC.
      - 1.) Concrete mix designs and material certificates including admixtures and compounds applied to the concrete after placement.
      - 2.) Reinforcing steel shop drawings including erection drawings, nail elevations (include all mech. openings) and bending details. Bar list will not be reviewed for correct quantities.
      - 3.) Structural steel shop drawings including erection drawings and piece details. Include connection submittals and miscellaneous framing.
      - 4.) Miscellaneous anchors shown on the structural drawings.
      - 5.) Wood truss design calculations and detailed erection and fabrication drawings. Standard stick framing shop drawings need not be submitted.
        - a.) NOTE: Pre-engineered wood trusses to be deferred submittal.
      - 6.) Construction and control joint plans and/or elevations.
    - E. Bob D. Campbell and Company, Inc. shall review shop drawings and related materials with comments, provided that each submission has met the above requirements. Bob D. Campbell and Company, Inc. shall return without comment unrequired material or submissions without GC approval stamp.

14. Structural Special Inspection:
    - A. The structural design for this project is based on completion of special inspections during construction in accordance with chapter 17 of the 2018 international Building Code. The owner shall employ one or more qualified special inspectors to provide the required special inspections.
    - B. Special inspections shall be required for the items indicated below. The General Contractor shall provide notification to the inspector when items requiring inspection are ready to be inspected and provide access for those inspections.
      - 1.) Placement of Concrete
      - 2.) Testing of Concrete
      - 3.) Bolts in Concrete
      - 4.) Placement of Reinforcing Steel
      - 5.) Verification of Soil Bearing Capacities
      - 6.) High Strength Bolting
      - 7.) Drill & Epoxy Bolts
      - 8.) Structural Welding
      - 9.) Shear wall installation
      - 10.) Post-Installed Anchors
      - 11.) Wood shear walls and holdowns
      - 12.) Wood gravity framing and placement
    - C. The special inspector shall furnish inspection reports to the building official, owner, architect and structural engineer, and any other designated person.
    - D. All discrepancies shall be brought to the immediate attention of the contractor for correction, then, if uncorrected, to the proper design authority, building official and structural engineer.
    - E. The special inspector shall submit a final signed report stating that the work requiring special inspection was, to the best of the inspector's knowledge, in conformance with the approved plans and specifications and the applicable workmanship provisions of the building code.

15. Copyright and Disclaimer:
    - A. All drawings in the structural set (S-series drawings) are the copyrighted work of Bob D. Campbell and company, Inc. These drawings may not be photographed, traced, or copies in any manner without the written permission of Bob D. Campbell and Company, Inc. Exception: Original drawings may be printed for distribution to the owner, architect, and general contractor for coordination, bidding, and construction. Subcontractors may not reproduce these drawings for any purpose or in any manner.
    - B. I, Jeff L. Wright, P.E., registered engineer and a representative of Bob D. Campbell and Company, Inc., do hereby accept professional responsibility as required by the professional registration laws of this state for the structural design drawings consisting of S-series drawings. I hereby disclaim responsibility for all other drawings in the construction document package, they being the responsibility of other design professionals whose seals and signed statements may appear elsewhere in the construction document package.

NAILING SCHEDULE (REFER TO NOTES #1 and #2)

	CONNECTION	ATTACHMENTS (REF NOTE #3 and #4)	
1	JOIST TO SILL OR GIRDER	3- 3" x 0.131" NAILS-TOENAIL	3-8d NAILS-TOENAIL
2	BRIDGING TO JOIST	2- 3" x 0.131" NAILS-TOENAIL EACH END	2-8d NAILS-TOENAIL EACH END
3	SOLE PLATE TO JOIST OR BLOCKING & TRUSS TO TOP PL	3" x 0.131" NAILS AT 8"o.c.-TYPICAL FACE NAIL 4-3" x 0.131" NAILS AT 16"o.c.-BRACED WALL PANELS	16d BOX NAILS AT 16"o.c. MAX. FACE NAILING 3-16d BOX NAILS AT 16"o.c. BRACED WALL PANEL
4	TOP PLATE TO STUD	3- 3" x 0.131" NAILS-END NAIL	2-16d NAILS-END NAIL
5	STUD TO SOLE PLATE	4- 3" x 0.131" NAILS-TOENAIL OR 3- 3" x 0.131" NAILS-END NAIL	4-8d NAILS-TOENAIL OR 2-16d NAILS-END NAIL
6	DOUBLE STUDS	3" x 0.131" NAILS AT 8"o.c.-FACE NAIL	16d BOX NAILS AT 24"o.c. MAX. FACE NAIL
7	DOUBLED TOP PLATES	3" x 0.131" NAILS AT 12"o.c.-FACE NAIL	16d BOX NAILS AT 16"o.c. MAX. FACE NAIL
8	DOUBLE TOP PLATE LAPS AND INTERSECTIONS	12-3" x 0.131" NAILS	8-16d NAILS
9	BLOCKING BETWEEN JOISTS OR RAFTERS TO TOP PLATE	3-3" x 0.131" NAILS -TOENAIL	3-8d NAILS-TOENAIL
10	RIM JOIST TO TOP PLATE	3" x 0.131" NAILS AT 6"o.c.-TOENAIL	10d NAILS AT 6"o.c. MAX.-TOENAIL
11	TOP PLATE LAPS AND INTERSECTIONS	3- 3" x 0.131" NAILS-FACE NAIL	2-16d NAILS-FACE NAIL
12	CONTINUOUS HEADER, TWO PIECES	3" x 0.131" NAILS AT 10"o.c. ALONG EACH EDGE	16d NAILS AT 16"o.c. MAX. ALONG EACH EDGE-TOENAIL
13	CEILING JOISTS TO PLATE	5- 3" x 0.131" NAILS-TOENAIL	3-8d NAILS-TOENAIL
14	CONTINUOUS HEADER TO STUD	4- 3" x 0.131" NAILS-TOENAIL	4-8d NAILS-TOENAIL
15	CEILING JOISTS, LAPS OVER PARTITIONS	4- 3" x 0.131" NAILS-FACE NAIL	3-16d NAILS-FACE NAIL
16	CEILING JOISTS TO PARALLEL RAFTERS	4- 3" x 0.131" NAILS-FACE NAIL	3-16d NAILS-FACE NAIL
17	RAFTER TO PLATE	3- 3" x 0.131" NAILS-TOENAIL	3-8d NAILS-TOENAIL
18	1" BRACE TO EACH STUD AND PLATE	2- 3" x 0.131" NAILS-FACE NAIL	2-8d NAILS-FACE NAIL
19	BUILT-UP GORNER AND MULTIPLE STUDS	3" x 0.131" NAILS AT 16"o.c.	16d NAILS AT 24"o.c. MAX.
20	BUILT-UP GIRDER AND BEAMS	3" x 0.131" NAILS AT 24"o.c. FACE NAILED TOP AND BOTTOM STAGGERED ON OPPISITE SIDES. 3- 3" x 0.131" NAILS AT ENDS AND EACH SPLICE	20d NAILS AT 32"o.c. MAX. TOP AND BOTTOM, STAGGERED ON OPPSITE SIDES. 2-20d NAILS AT ENDS AND EACH SPLICE
21	BUILT-UP LAMINATED VENEER LUMBER BEAMS	3" x 0.131" NAILS AT 8"o.c. TOP AND BOTTOM ALONG EDGE	16d NAILS AT 12"o.c. TOP AND BOTTOM ALONG EDGE
22	2" PLANKING	4- 3" x 0.131" NAILS AT EACH SUPPORT	16d NAILS AT EACH SUPPORT
23	RIM BOARD TO TRUSS	2 - 3" x 0.131" FACE NAILS (IT/IB @ EA TRUSS)	2-10d NAILS - FACE NAILS (IT/IB @ EA TRUSS)
24	BUILT-UP STUD PACK COLUMNS	REFER TO DETAIL 6/S1.1	REFER TO DETAIL 6/S1.1

NOTES:
1.) ALL NAILS SHALL BE AS NOTED UNLESS OTHERWISE SPECIFIED ON STRUCTURAL DRAWINGS OR ALTERNATE PROVIDED BY ENGINEER IN WRITING.
2.) CONDITIONS NOT SPECIFIED SHALL BE IN ACCORDANCE WITH CURRENT INTERNATIONAL BUILDING CODE.
3.) NAILING DESIGNATION:
   4- 3" x 0.131" NAILS
   - 4 = QUANTITY
   - 3" = NAIL LENGTH
   - 0.131" = DIAMETER IN INCHES
4.) ALL NAILS NOTED AS 8d, 10d, 16d, ETC. SHALL BE COMMON NAILS UNLESS NOTED BOX.
5.) REFER TO SHEARWALL SCHEDULE FOR ADDT'L NAILING REQUIREMENTS

TYPICAL SYMBOL LEGEND:

- (A) - BEAM OR HEADER PER SCHED ON S1.1
- (A-U) - UPSET BEAM OR HEADER PER SCHED ON S1.1
- (#) - FOOTING TYPE PER SCHED ON S1.1
- * - SHEARWALL HOLDDOWN TYPE PER SCHED ON S1.2
- SW - SHEARWALL PER SCHED ON S1.2
- CJ - CONSTRUCTION JOINT PER 2/S3.1
- SJ - SAW JOINT PER 1/S3.1
- ⟶ - SPAN DIRECTION

BOB D. CAMPBELL & CO.
Structural Engineers Since 1957
4338 Belleview Ave. 816.531.4144
Kansas City, MO 64111 www.bdc-engrs.com

Architects Planners Designers
730 N. Ninth
P.O. BOX 2928
Salina, KS 67402
785.827.0386
1800 Wyandotte St.,
Suite 102
Kansas City, MO 64108
jgr@jgrarchitects.com
JGR
JONES GILLAM RENZ

ANGLERS FOUR HUNDRED

APARTMENT COMPLEX

STEAMBOAT SPRINGS, COLORADO

COLORADO LICENSED PROFESSIONAL ENGINEER 5/28/21

DATE: 5-28-2021
JOB: 19-3047
SHEET: S1.0

COPYRIGHTED©

HEADER SCHEDULE

MARK	HEADER	JAMB STUDS	NOTES
A	(2) 2x10 w/ ½" PLYWOOD SPACER Pl	2 JACK / 2 KING	
B	(2) 1¾" x 9¼" LVLs	4 JACK / 1 KING (U.N.O. ON PLAN)	
C	(3) 2x10 w/ (2) ½" PLYWOOD SPACER Pls	2 JACK / 2 KING	
D	(3) 2x12 w/ (2) ½" PLYWOOD SPACER Pls	2 JACK / 3 KING	
E	(3) 1¾"x11¾" LVLs	2 JACK, 2 KING	
F	(3) 2x10 w/ (2) ½" PLYWOOD SPACER Pls	1 JACK / 1 KING	
G	(2) 1¾" x 11¾" LVLs	3 JACK / 1 KING	
H	(3) 1¾" x 9¼" LVLs	2 JACK / 2 KING	
J	(2) 2x10 w/ ½" PLYWOOD SPACER Pl	2 JACK / 1 KING	
K	(2) 2x10 w/ ½" PLYWOOD SPACER Pl	1 JACK / 2 KING	
L	(3) 2x10	3 JACK	
M	(2) 1¾" x 7¼" LVLs	2 JACK / 1 KING	

NOTES:
1. JAMB STUDS SHALL MATCH SIZE & GRADE OF WALL STUDS UNO.
2. WHERE BEAM IS NOTED "UPSET", ALL JAMB STUDS NOTED WILL EXTEND TO DOUBLE TOP PLATE.
3. ALL EXTERIOR LUMBER TO BE TREATED.
4. PROVIDE SQUASH BLOCKS AT TRUSSES & BLOCKING FRAMING WHERE JAMBS OR STUD PACKS ARE DISCONT. QUANTITY TO MATCH JAMB OR STUD PACK ABOVE.
5. PROVIDE ½" PLYWOOD SPACER PLs AT HEADERS CONSTRUCTED WITH 2x LUMBER.
6. AT CONTRACTOR'S OPTION-PROVIDE GLULAM IN LIEU OF PSLs.
7. REFER TO DTL 5/S1.1 FOR MULTI-PLY MEMBER CONNECTION REQUIREMENTS.
8. ATTACH JAMB AND KING STUDS TOGETHER PER CONNECTION TYPE 24 IN NAILING SCHEDULE ON SHEET S1.0.
9. REFER TO DETAILS 7/S1.1 FOR TYPICAL HEADER CONDITIONS.

BUILDING A STUD BEARING WALL SCHEDULE

LOCATION	STUD SIZE AND SPACING
(TYP) EXT WALL	2x6 @ 16"oc STUDS (U.N.O. IN SECTIONS)
INT WALL (AT TRUSS BRG CORRIDORS)	2x4 @ 16"oc STUDS (U.N.O. IN SECTIONS)
INT WALL (AT TRUSS BRG DEMISING WALLS)	2x6 @ 16"oc STUDS (U.N.O. IN SECTIONS)
INT WALL (EXCEPT AT NON TRUSS BRG CORRIDORS)	(3) 2x4 @ 16"oc (1st FLR TO 2nd FLR), (2) 2x4 @ 16"oc (2nd FLR TO 3rd FLR), 2x4 @ 16"oc DBL ALT STUDS (3rd FLR TO 4th FLR), 2x4 @ 16"oc (ABOVE 4th FLR)
INT WALL (AT NON TRUSS BRG CORRIDORS)	2x4 @ 16"oc (EXCEPT DBL. ALT. JOISTS @ FIRST FLOOR)

BUILDING B STUD BEARING WALL SCHEDULE

LOCATION	STUD SIZE AND SPACING
(TYP) EXT WALL	2x6 @ 16"oc STUDS (U.N.O. IN SECTIONS)
INT WALL (AT TRUSS BRG CORRIDORS)	(2) 2x4 @ 16"oc (1st FLR TO 2nd FLR), 2x4 @ 16"oc DBL ALT STUDS (ABOVE 2nd FLR)
INT WALL (AT TRUSS BRG DEMISING WALLS)	2x6 @ 16"oc STUDS (U.N.O. IN SECTIONS)
INT UNIT BRG WALL (EXCEPT AT NON TRUSS BRG CORRIDORS)	(2) 2x4 @ 16"oc (1st FLR TO 2nd FLR), 2x4 @ 16"oc DBL ALT STUDS (2nd FLR TO 3rd FLR), 2x4 @ 16"oc (ABOVE 3rd FLR) AT SINGLE SIDED ROOF TRUSS BRG WALLS SIMILAR TO BUILDING A AT DOUBLE TRUSS BRG WALLS (U.N.O. IN SECTIONS)
INT UNIT BRG WALL (AT NON ROOF TRUSS BRG CORRIDORS)	2x4 @ 16"oc (EXCEPT DBL. ALT. JOISTS @ FIRST FLOOR)

NOTES:
1. PROVIDE 2x BLOCKING @ MID HEIGHT (5'-0" MAX) @ ALL LOAD BEARING WALLS NOT SHEATHED ON BOTH SIDES AND ALL 2x8 WALLS.
2. ALL STUDS TO BE No. 2 GRADE U.N.O.
3. RE: 6/S1.1 FOR NAILING OF MULTIPLE STUDS.
4. REFER TO ARCH/MEP DRAWING FOR LOCATIONS OF FURRED OUT WALLS TO ACCOMMODATE PLUMBING OR MEP ITEMS.

SPREAD FOOTING SCHEDULE

MARK	SIZE	REINFORCING
3	3'-0"x3'-0"x1'-0" Dp	#4 @ 6"oc EACH WAY, BOTTOM
3.5	3'-6"x3'-6"x1'-2" Dp	#4 @ 6"oc EACH WAY, BOTTOM
4	4'-0"x4'-0"x1'-4" Dp	#4 @ 6"oc EACH WAY, BOTTOM

NOTES:
1. SPREAD FOOTINGS LOCATED AT INTERIOR SHALL BE POURED MONOLITHIC WITH THE SLAB AS A THICKENED PORTION OF SLAB UNLESS THEY HAVE A STEEL COLUMN BEARING ATOP.
2. SPREAD FOOTINGS LOCATED AT INTERIOR WITH STEEL COLUMNS BEARING ATOP SHALL BE LOCATED AT 99'-4".
3. SPREAD FOOTINGS LOCATED AT PERIMETER (EXTERIOR) OF BUILDING SHALL BE POURED MONOLITHIC WITH GRADE BEAMS

STRUCTURAL DECK & SLAB SCHEDULE

MARK	DESCRIPTION
FD-1	3/4" PLYWOOD SHEATHING ATTACH w/ 8d NAILS @ 6"oc AT EDGES AND 12"oc AT FIELD.
RD-1	5/8" ZIP STRIP ROOF SHEATHING ATTACH w/ 8d NAILS @ 6"oc AT EDGES AND 12"oc AT FIELD.
SOG-1	4" CONC. SLAB ATOP 15 MIL VAPOR BARRIER ATOP 6" GRAVEL ATOP COMPACTED SELECT FILL & SUB BASE AS REQUIRED BY PROJECT GEOTECH. REPORT. REINF. w/ 6x6-6/6 NON-EXPANSIVE WWF. EL. T/C = 100'-0. NOTE: ALL CLAY MATERIALS BELOW BUILDING SUB-BASE TO BE REMOVED.

NOTES:
1. SOG = SLAB-ON-GRADE TYPE
2. FD = FLOOR DECK TYPE
3. RD = ROOF DECK TYPE

COLUMN SCHEDULE

TYPE	SIZE	BASE Pl	SHAPE	CONNECTION
C1	HSS5x5x¼	11"x½"x11" (B/BASE Pl EL. 99'-3")	A	(4) ¾"ø x1'-6"Lg ANCHOR BOLTS (w/ 3" Hk)
C2	HSS5x5x¼	5½"x¾"x13" (B/BASE Pl EL. 100'-1")	B	(2) ¾"ø x7"Lg HILTI KH-EZ SCREW ANCHORS

NOTES:
1. SEE PLAN FOR ORIENTATION OF COLUMNS.
2. ALL ANCHOR BOLTS SHALL BE ASTM F1554, GRADE 36 U.N.O.
3. SET BASE PLATES ATOP 1" GROUT.

SHAPE (NOT TO SCALE)

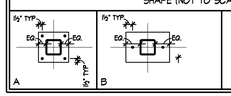

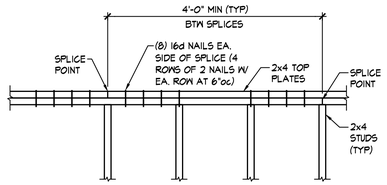

(TYP) TOP PLATE SLPICE
¾" = 1'-0" 1 S1.1

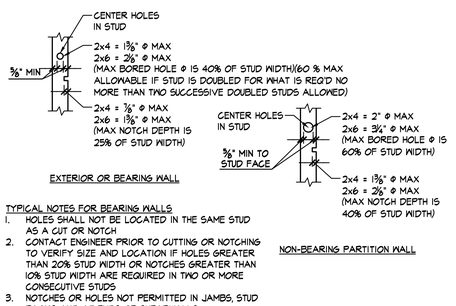

TYPICAL NOTES FOR BEARING WALLS
1. HOLES SHALL NOT BE LOCATED IN THE SAME STUD AS A CUT OR NOTCH
2. CONTACT ENGINEER PRIOR TO CUTTING OR NOTCHING TO VERIFY SIZE AND LOCATION IF HOLES GREATER THAN 20% STUD WIDTH OR NOTCHES GREATER THAN 10% STUD WIDTH ARE REQUIRED IN TWO OR MORE CONSECUTIVE STUDS
3. NOTCHES OR HOLES NOT PERMITTED IN JAMBS, STUD PACKS AND AT ENDS OF SHEARWALLS

SECTION
¾" = 1'-0" 2 S1.1

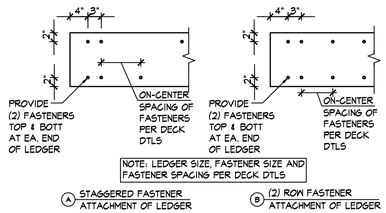

TYPICAL LEDGER CONNECTION
¾" = 1'-0" 3 S1.1

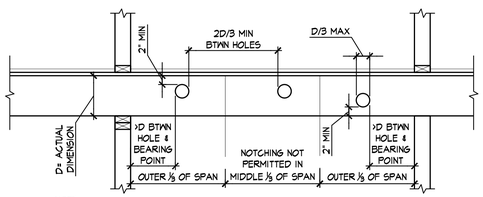

NOTE:
1. CONTACT ARCHITECT PRIOR TO CUTTING JOISTS TO VERIFY SIZE AND LOCATION
2. DETAIL APPLIES TO 2x FRAMING ONLY. REFER TO ENGINEERED OR COMPOSITE LUMBER MANUFACTURER'S RECOMMENDATIONS AT PSLs, LVLs, LSLs & GLULAM

SECTION
¾" = 1'-0" 4 S1.1

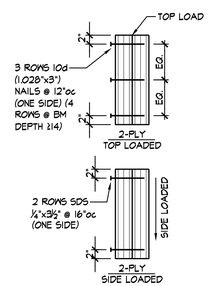

TYPICAL MULTI-PLY BEAM CONNECTION
¾" = 1'-0" 5 S1.1

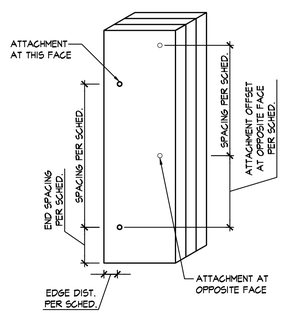

TYPICAL MULTI-PLY STUD CONNECTION
1½" = 1'-0" 6 S1.1

BUILT-UP STUD PACK COLUMN ATTACHMENT SCHEDULE

NUMBER OF PLIES	ATTACHMENT AT COLUMN STUD PACKS SUPPORTING BEAMS	ATTACHMENT AT WALL STUD PACKS SUPPORTING TRUSSES
2-PLY MEMBERS	8d NAILS AT 12"oc, 1" FROM EDGE, W/ OPPOSITE EDGE NAILED FROM OPPOSITE SIDE OFFSET 6", @ 12"oc W/ FIRST NAIL 2" FROM EA. END	8d NAILS AT 12"oc, 1" FROM EDGE, W/ OPPOSITE EDGE NAILED FROM OPPOSITE SIDE OFFSET 6", @ 12"oc W/ FIRST NAIL 2" FROM EA. END
3-PLY MEMBERS	20d NAILS AT 16"oc, 1 1/2" FROM EDGE W/ OPPOSITE EDGE NAILED FROM OPPOSITE SIDE OFFSET 8", @ 16"oc W/ FIRST NAIL 3" FROM EA. END	8d NAILS AT 12"oc, 1" FROM EDGE, W/ OPPOSITE EDGE NAILED FROM OPPOSITE SIDE OFFSET 6", @ 12"oc W/ FIRST NAIL 2" FROM EA. END
4-PLY MEMBERS	1/4"ø5" SIMPSON SDS SCREWS AT 16"oc, 1 1/2" FROM EDGE W/ OPPOSITE EDGE SCREWED FROM OPPOSITE SIDE OFFSET 8", @ 16"oc W/ FIRST SCREW 4" FROM EA. END	3 PLIES ATTACHED PER 3-PLY ATTACHMENT WITH 4TH PLY ATTACHED WITH 8d NAILS AT 12"oc IN 2 ROWS, 1 1/2" FROM EDGE, OFFSET ROWS 6"
5-PLY MEMBERS	1/4"ø6" SIMPSON SDS SCREWS AT 12"oc, 1 1/2" FROM EDGE W/ OPPOSITE EDGE SCREWED FROM OPPOSITE SIDE OFFSET 6", @ 12"oc W/ FIRST SCREW 4" FROM EA. END	3 PLIES ATTACHED PER 3-PLY ATTACHMENT WITH 4TH & 5TH PLY ATTACHED AT OPPOSITE SIDES WITH 8d NAILS AT 12"oc IN 2 ROWS, 1 1/2" FROM EDGE, OFFSET ROWS 6"
6-PLY MEMBERS	1/4"ø8" SIMPSON SDS SCREWS AT 12"oc, 1 1/2" FROM EDGE W/ OPPOSITE EDGE SCREWED FROM OPPOSITE SIDE OFFSET 6", @ 12"oc W/ FIRST SCREW 4" FROM EA. END	3-PLIES ATTACHED PER 3-PLY ATTACHMENT WITH 4TH PLY ATTACHED WITH 8d NAILS AT 12"oc IN 2 ROWS, 1 1/2" FROM EDGE, OFFSET ROWS 6" AND 5TH AND 6TH PLIES ATTACHED WITH 1/4"ø5" SIMPSON SDS SCREWS AT 12"oc IN 2 ROWS, 1 1/2" FROM EDGE, OFFSET ROWS 6"oc W/ FIRST SCREW 4" FROM EA. END

NOTES:
1. ALL BUILT-UP STUD PACKS MUST ALIGN FLOOR-TO-FLOOR WITH SOLID BLOCKING (SQUASH BLOCKS) AT FLOOR CAVITIES.
2. EXTEND ALL STUD PACKS TO COLUMNS UNLESS NOTED OTHERWISE.
3. ALL NAILS ARE COMMON NAILS UNLESS NOTED OTHERWISE.

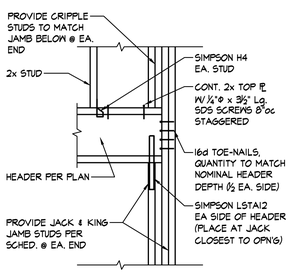

TYP. HEADER DETAIL @ ROOF TRUSS BEARING LOCATIONS

SECTION
¾" = 1'-0" 7 S1.1

BOB D. CAMPBELL & CO.
Structural Engineers Since 1957
4338 Belleview Ave. 816.531.4144
Kansas City, MO 64111 www.bdc-engrs.com

Architects Planners Designers
730 N. Ninth
P.O. BOX 2928
Salina, KS 67402
785.827.0386
1800 Wyandotte St.
Suite 102
Kansas City, MO 64108
jgr@jgrarchitects.com
JONES GILLAM RENZ

ANGLERS FOUR HUNDRED

APARTMENT COMPLEX

STEAMBOAT SPRINGS, COLORADO

COLORADO LICENSED PROFESSIONAL ENGINEER

DATE: 5-28-2021
JOB: 19-3047
SHEET: S1.1

COPYRIGHTED ©

BOB D. CAMPBELL & CO.
Structural Engineers Since 1957
4338 Belleview Ave. 816.531.4144
Kansas City, MO 64111 www.bdc-engrs.com

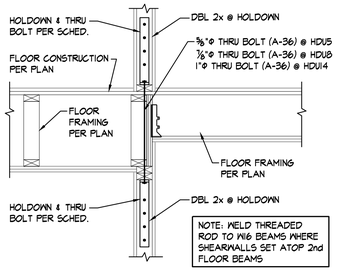

TYP HOLDOWN DETAIL

SECTION 2 / S1.2
¾" = 1'-0"

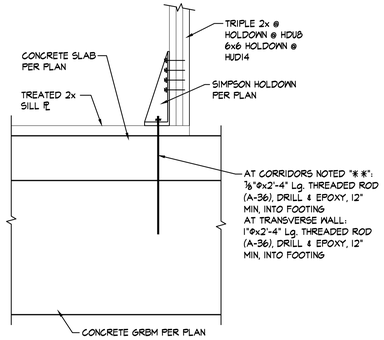

TYP HOLDOWN DETAIL

SECTION 3 / S1.2
¾" = 1'-0"

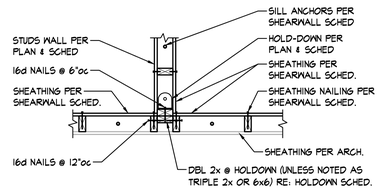

TYPICAL @ DISCONTINUOUS SHEARWALL SHEATHING

SECTION 4A / S1.2
¾" = 1'-0"

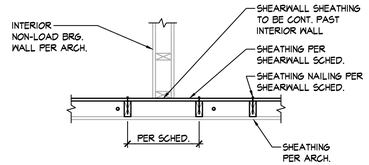

TYPICAL @ SHEARWALL CONTINUOUS PAST NON-LOAD BRG WALL

SECTION 4B / S1.2
¾" = 1'-0"

HOLDOWN SCHEDULE

MARK	FLOOR LEVEL (W/ APPLICABLE HOLDOWN TYPE PER FLOOR)			
	1st FLOOR	2nd FLOOR	3rd FLOOR	4th FLOOR
✱	HDU14-SDS2.5 (6x6)	HDU14-SDS2.5 (6x6)	HDU8-SDS2.5	HDU5-SDS2.5
✱✱	HDU8-SDS2.5 (TRIPLE STUD)	HDU8-SDS2.5 (TRIPLE STUD)	HDU5-SDS2.5	HDU5-SDS2.5

NOTES:
1. HOLDOWN TYPES ARE BASED UPON MANUFACTURER SIMPSON STRONG-TIE.
2. REFER TO SECTION DETAILS ON S1.2 FOR TYPICAL HOLDOWN DETAILS.
3. WHERE THE ENDS OF PERPENDICULAR SHEAR WALLS INTERSECT AND ONLY ONE HOLDOWN SHOWN ON PLAN, FASTEN ALL STUDS TOGETHER PER SCHEDULE AND USE LARGER OF THE TWO HOLDOWNS SHOWN ON THE SHEAR WALL SCHEDULE.
4. ALL HOLDOWN POSTS TO BE (2) 2x's (MIN.) (U.N.O.) TO MATCH STUD SIZE & GRADE NOTED IN WALL SCHEDULE. PROVIDE ADDITIONAL STUDS AS REQ'D TO MEET QUANTITY NOTED IN SCHED.
5. REFER TO SECTIONS 2/S1.2, 3/S1.2, 4A/S1.2 & 4B/S1.2 FOR HOLDOWN ANCHOR REQUIREMENTS.

PROVIDE UNIT UPLIFT HOLDOWNS @ 48"oc MAX @ LOAD BEARING INTERIOR WALLS SUPPORTING ROOF TRUSSES. HOLDOWNS SHALL BE PROVIDED WITHIN 6" OF JAMBS OF ALL INTERIOR LOAD BEARING ROOF HEADERS & GIRDER TRUSS BEARING AND WITHIN 48" OF SHEARWALL HOLDOWNS

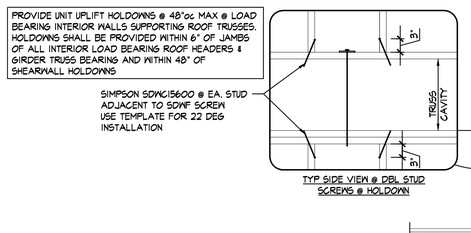

TYP SIDE VIEW @ DBL STUD SCREWS @ HOLDOWN

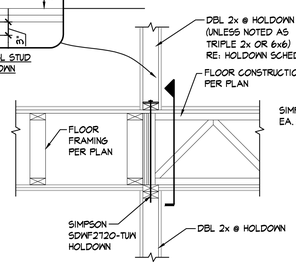

TYP UNIT UPLIFT HOLDOWN DETAIL @ TOP FLOOR LOAD BEARING WALLS

SECTION 5A / S1.2
¾" = 1'-0"

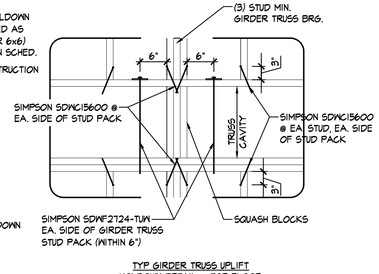

TYP GIRDER TRUSS UPLIFT HOLDOWN DETAIL @ TOP FLOOR

SECTION 5B / S1.2
¾" = 1'-0"

SHEARWALL SCHEDULE

SHEARWALL LOCATION	SHEARWALL TYPE		FLOOR		SILL PLATE CONNECTION (RE: NOTES 6 & 7)	NUMBER OF WALL STUDS AT HOLD-DOWN (RE: NOTE 4)
			1st & 2nd FLOOR WALLS	3rd & 4th FLOOR WALLS		
AT DEMISING WALLS	SW	MATERIAL & THICKNESS	⅞" OSB SHEATHING ONE SIDE, W/ EDGES BLOCKED	⅞" OSB SHEATHING ONE SIDE, W/ EDGES BLOCKED		
		NAIL SIZE & SPACING	8d NAILS 4/12	8d NAILS 6/12		
AT CORRIDOR WALLS	SW	MATERIAL & THICKNESS	⅞" OSB SHEATHING ONE SIDE, W/ EDGES BLOCKED	⅞" OSB SHEATHING ONE SIDE, W/ EDGES BLOCKED		
		NAIL SIZE & SPACING	8d NAILS 4/12	8d NAILS 6/12		

NOTES:
1. NAILING SHALL BE TO ALL STUDS, TOP & BOTTOM PLATES, AND BLOCKING WHERE INDICATED.
2. HOLDOWNS PER PLAN & SCHEDULE.
3. WHERE THE ENDS OF PERPENDICULAR SHEAR WALLS INTERSECT AND ONLY ONE HOLDDOWN SHOWN ON PLAN, FASTEN ALL STUDS TOGETHER PER SCHEDULEA AND USE LARGE OF THE TWO HOLDDOWNS SHOWN IN THE SHEARWALL SCHEDULE. REFERENCE DETAILS 4A, 4B, 4C, AND 4D ON SHEET S1.2 FOR SHEATHING AND HOLDOWN ATTACHMENT AT PERPENDICULAR WALLS AND STUD WALL SIZE TRANSITIONS.
4. PROVIDE 2 WALL STUDS AT EACH HOLDDOWN UNLESS NOTED OTHERWISE IN SCHEDULE. AT LOCATIONS WHERE A SHEARWALL TERMINATES AT A OPENING JAMB, PROVIDE NUMBER OF STUDS PER JAMB SCHEDULE PLUS AN ADDITIONAL STUD FOR THE SHEARWALL. ATTACH ALL STUDS TOGETHER PER 6/S1.1.
5. NAIL SPACING SHOWN AS (#/#) INDICATES FASTENERS SPACING IN INCHES AT THE EDGES/FIELD WHERE FIELD IS THE INTERMEDIATE MEMBERS.
6. TYPICAL SILL PLATE TO WOOD SHALL BE 20d COMMON NAILS (1.092x4") AT 12"oc UNLESS NOTED OTHERWISE IN SCHEDULE.
7. TYPICAL SILL PLATE TO CONCRETE SHALL BE ½"ø ANCHORS:
   AT 2x4 WALLS SPACE AT 24"oc MAX WITH ¼"x2½"x2½" PLATE WASHER OR SIMPSON BPS ½ - 3 @ CONTRACTORS OPTION
   PLATE WASHERS TO MAINTAIN MAX OF ½" BETWEEN EDGE OF SILL PLATE AND EDGE OF PLATE WASHER
8. SHEARWALL SHEATHING CALLED OUT AT CORRIDOR WALLS SHALL BE LOCATED AT UNIT SIDE OF WALL.
9. AT GYPSUM SHEARWALLS NO. 6 x 1 ¼" TYPE S OR W SCREWS CAN BE UTILIZED AS THE SAME SPACING AS SPECIFIED 6d NAILS.
10. NAILS @ WOOD STRUCTURE PANEL SHEAR WALLS SHALL BE GALVANIZED COMMON OF TYPE INDICATED IN SCHED.

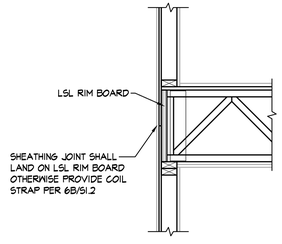

TYPICAL EXTERIOR SHEATHING JOINT

6A / S1.2
¾" = 1'-0"

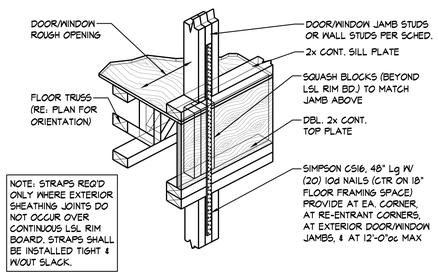

TYPICAL COIL STRAP @ EXTERIOR JAMBS SUPPORTING ROOF FRAMING AT FLOOR DIRECTLY BELOW ROOF

DETAIL 6B / S1.2
¾" = 1'-0"

Architects Planners Designers
1800 Wyandotte St., Suite 102
Kansas City, MO 64108
730 N. Ninth
P.O. BOX 2928
Salina, KS 67402
785.827.0386
jgr@jgrarchitects.com
JONES GILLAM RENZ

ANGLERS FOUR HUNDRED
APARTMENT COMPLEX
STEAMBOAT SPRINGS, COLORADO

COLORADO LICENSED KYLE W. [illegible] PROFESSIONAL ENGINEER 5/27/21

DATE: 5-28-2021
JOB: 19-3047
SHEET: S1.2

COPYRIGHTED ©

BOB D. CAMPBELL & CO.
Structural Engineers Since 1957
4338 Belleview Ave. 816.531.4144
Kansas City, MO 64111 www.bdc-engrs.com

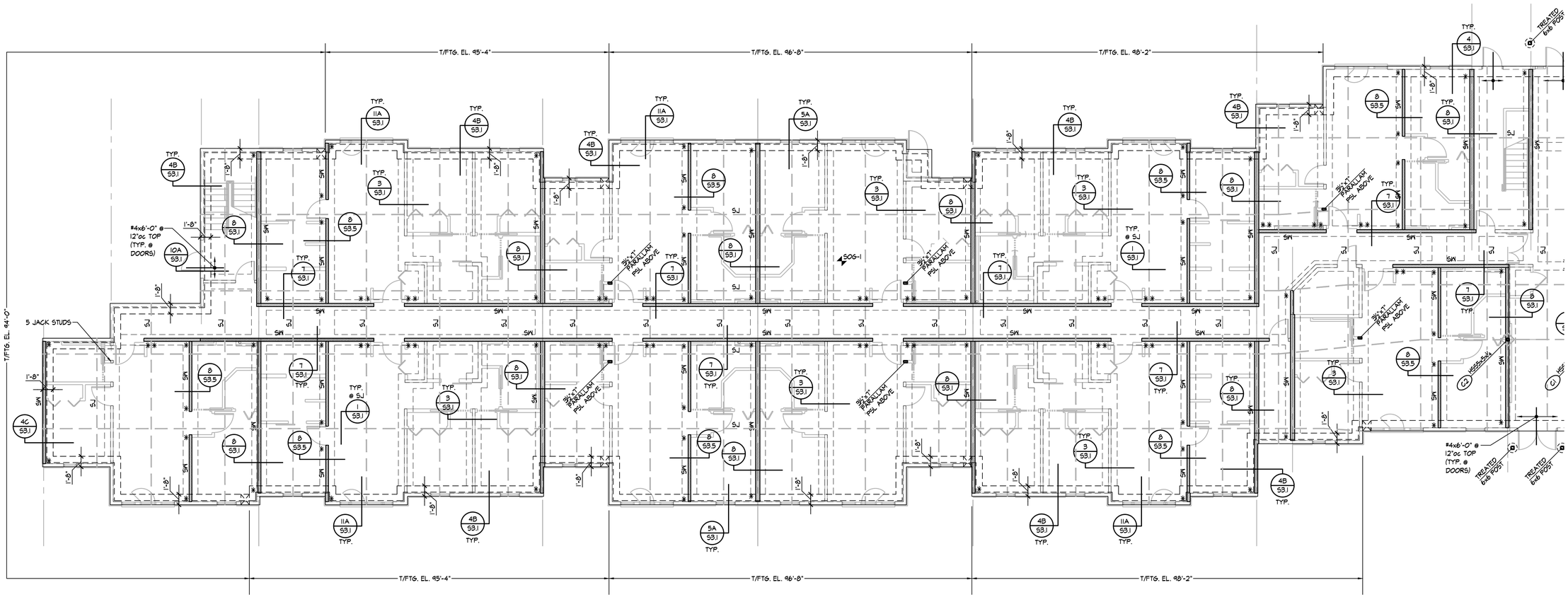

FOUNDATION PLAN - BUILDING A

⅛" = 1'-0"

NOTES:

1. REFER TO GENERAL NOTES ON SHEET S1.0
2. REFER TO COLUMN & FOOTING SCHEDULE ON SHEET S1.1
3. T/C EL. 100'-0"
4. T/FTG. EL. 99'-2" U.N.O.
5. REFER TO ARCHITECTURAL DRAWINGS FOR DIMENSIONS NOT SHOWN
6. REFER TO SHEET S2.11 FOR SHEARWALL AND HOLDOWN INFORMATION
7. REFER TO SHEETS S1.0 AND S1.1 FOR TYPICAL NAILING WOOD FRAMING DETAILS
8. REFER TO SECTION 11/S3.4 FOR TYPICAL FOOTING STEP DETAIL

Architects Planners Designers
730 N. Ninth
P.O. BOX 2928
Salina, KS 67402
785.827.0386
1800 Wyandotte St.,
Suite 102
Kansas City, MO 64108
jgr@jgrarchitects.com
JONES GILLAM RENZ

ANGLERS FOUR HUNDRED

APARTMENT COMPLEX

STEAMBOAT SPRINGS, COLORADO

COLORADO LICENSED PROFESSIONAL ENGINEER
JEFFREY LYLE WEST
5/28/21

DATE: 5-28-2021
JOB: 19-3047
SHEET:

COPYRIGHTED ©

S2.1

BOB D. CAMPBELL & CO.
Structural Engineers Since 1957
4338 Belleview Ave. 816.531.4144
Kansas City, MO 64111 www.bdc-engrs.com

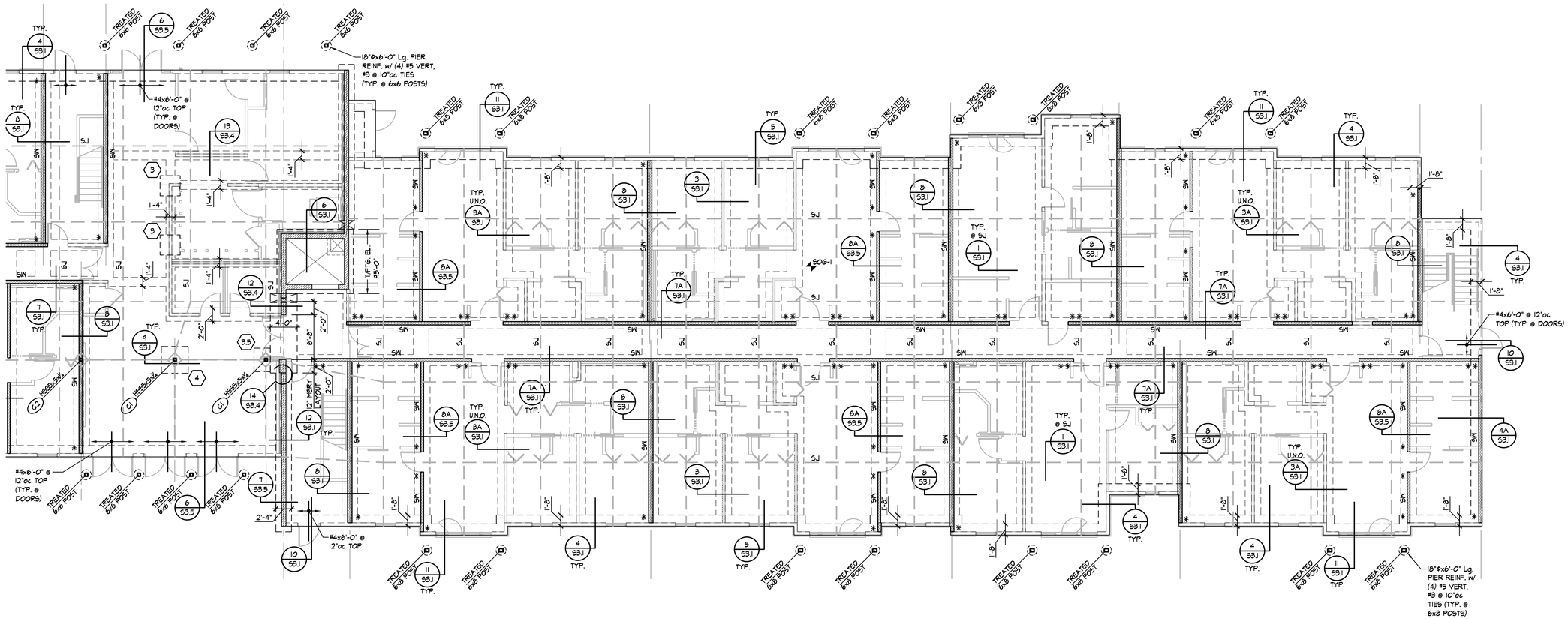

FOUNDATION PLAN - BUILDING B

NORTH

1/8" = 1'-0"

NOTES:

1. REFER TO GENERAL NOTES ON SHEET S1.0
2. REFER TO COLUMN & FOOTING SCHEDULE ON SHEET S1.1
3. T/C EL. 100'-0"
4. T/FTG. EL. 99'-2" U.N.O.
5. REFER TO ARCHITECTURAL DRAWINGS FOR DIMENSIONS NOT SHOWN
6. REFER TO SHEET S2.12 FOR SHEARWALL AND HOLDOWN INFORMATION
7. REFER TO SHEETS S1.0 AND S1.1 FOR TYPICAL NAILING WOOD FRAMING DETAILS
8. REFER TO SECTION 11/S3.4 FOR TYPICAL FOOTING STEP DETAIL

Architects Planners Designers
730 N. Ninth
P.O. BOX 2928
Salina, KS 67402
785.827.0386
1800 Wyandotte St.,
Suite 102
Kansas City, MO 64108
jgr@jgrarchitects.com
JONES GILLAM RENZ

ANGLERS FOUR HUNDRED

APARTMENT COMPLEX

STEAMBOAT SPRINGS, COLORADO

COLORADO LICENSED PROFESSIONAL ENGINEER
KEY LYLE
5/28/21

DATE: 5-28-2021

JOB: 19-3047

SHEET:

COPYRIGHTED ©

S2.2

BOB D. CAMPBELL & CO.
Structural Engineers Since 1957
4338 Belleview Ave. 816.531.4144
Kansas City, MO 64111 www.bdc-engrs.com

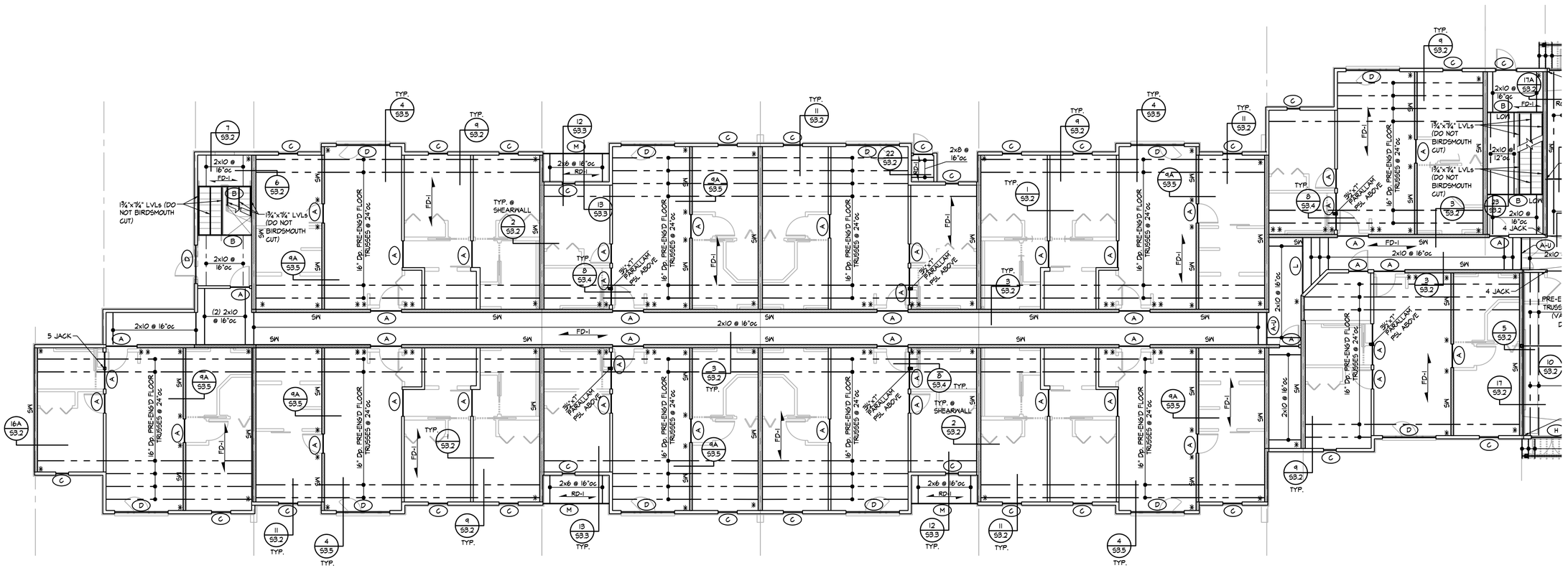

SECOND FLOOR FRAMING PLAN - BUILDING A

⅛" = 1'-0"

NOTES:

1. REFER TO GENERAL NOTES ON SHEET S1.0
2. REFER TO HEADER SCHEDULE ON SHEET S1.1
3. REFER TO ARCHITECTURAL DRAWINGS FOR DIMENSIONS NOT SHOWN
4. REFER TO SHEET S2.11 FOR SHEARWALL AND HOLDOWN INFORMATION
5. REFER TO SECTIONS 5A, 5B, 6A AND 6B ON SHEET S1.2 FOR HOLDOWN DETAILS AT THE SECOND FLOOR
6. PROVIDE TRIPLE STUDS AT ALL PRE-ENG. TRUSS GIRDERS
7. REFER TO SHEETS S1.0 AND S1.1 FOR TYPICAL NAILING WOOD FRAMING DETAILS

Architects Planners Designers
730 N. Ninth
P.O. BOX 2928
Salina, KS 67402
785.827.0386
1800 Wyandotte St.,
Suite 102
Kansas City, MO 64108
jgr@jgrarchitects.com
JONES GILLAM RENZ

ANGLERS FOUR HUNDRED

APARTMENT COMPLEX

STEAMBOAT SPRINGS, COLORADO

COLORADO LICENSED PROFESSIONAL ENGINEER
5/28/21

DATE: 5-28-2021
JOB: 19-3047
SHEET:

COPYRIGHTED ©

S2.3

BOB D. CAMPBELL & CO.
Structural Engineers Since 1957
4338 Belleview Ave. 816.531.4144
Kansas City, MO 64111 www.bdc-engrs.com

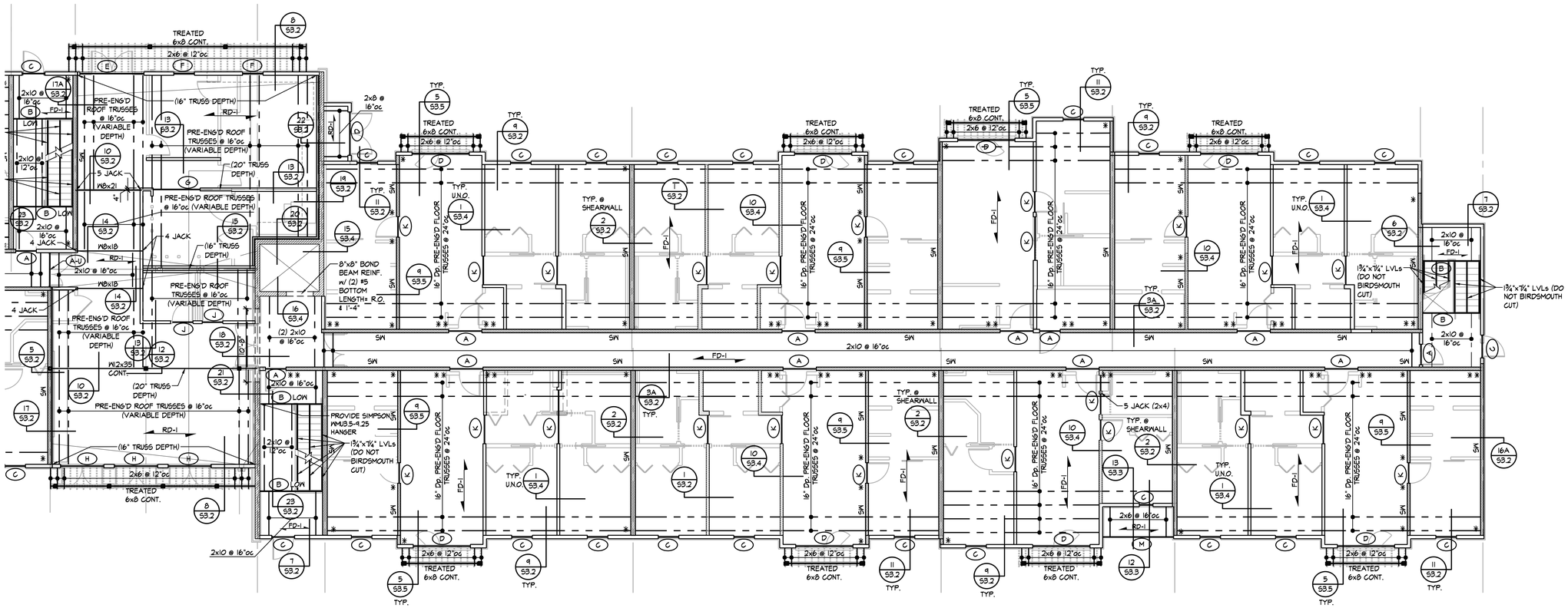

SECOND FLOOR FRAMING PLAN - BUILDING B

NORTH

⅛" = 1'-0"

NOTES:

1. REFER TO GENERAL NOTES ON SHEET S1.0
2. REFER TO HEADER SCHEDULE ON SHEET S1.1
3. REFER TO ARCHITECTURAL DRAWINGS FOR DIMENSIONS NOT SHOWN
4. REFER TO SHEET S2.12 FOR SHEARWALL AND HOLDOWN INFORMATION
5. REFER TO SECTIONS 5A, 5B, 6A AND 6B ON SHEET S1.2 FOR HOLDOWN DETAILS AT THE SECOND FLOOR
6. PROVIDE TRIPLE STUDS AT ALL PRE-ENG. TRUSS GIRDERS
7. REFER TO SHEETS S1.0 AND S1.1 FOR TYPICAL NAILING WOOD FRAMING DETAILS

Architects Planners Designers
730 N. Ninth
P.O. BOX 2928
Salina, KS 67402
785.827.0386
1800 Wyandotte St.,
Suite 102
Kansas City, MO 64108
jgr@jgrarchitects.com
JONES GILLAM RENZ

ANGLERS FOUR HUNDRED

APARTMENT COMPLEX

STEAMBOAT SPRINGS, COLORADO

COLORADO LICENSED PROFESSIONAL ENGINEER
KEY LYLE WILLIAMS
5/28/21

DATE: 5-28-2021

JOB: 19-3047

SHEET:

COPYRIGHTED ©

S2.4

BOB D. CAMPBELL & CO.
Structural Engineers Since 1957
4338 Belleview Ave. 816.531.4144
Kansas City, MO 64111 www.bdc-engrs.com

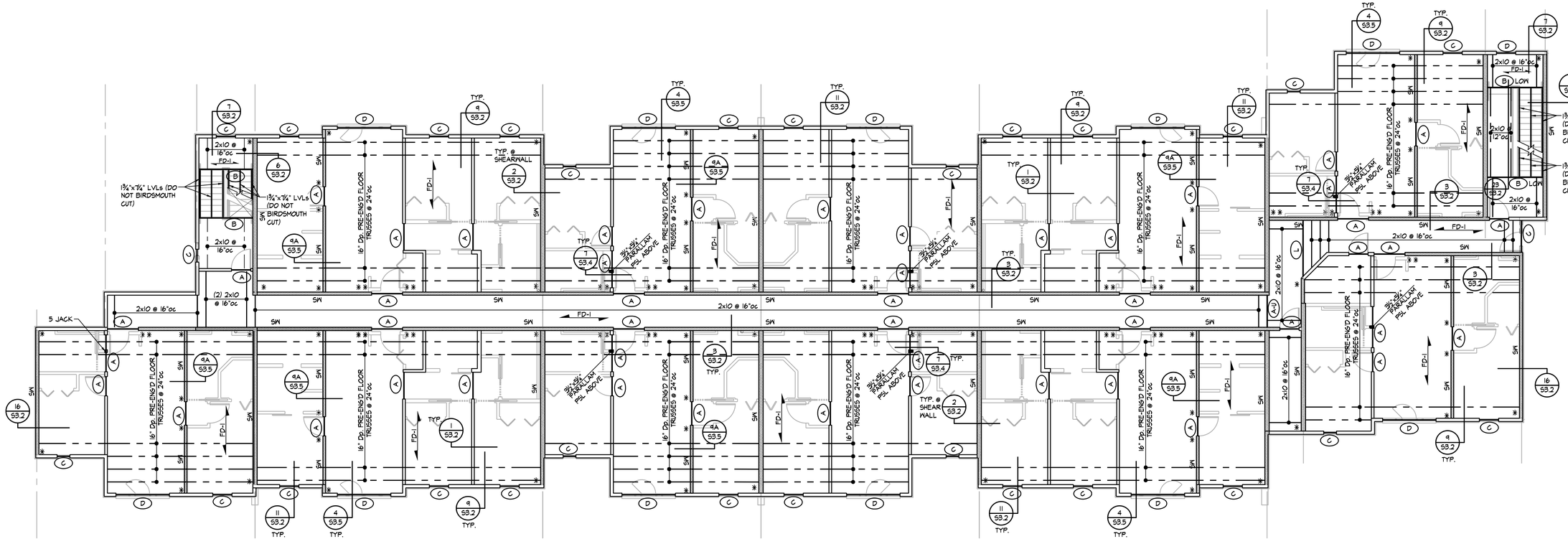

THIRD FLOOR FRAMING PLAN - BUILDING A

⅛" = 1'-0"

NOTES:

1. REFER TO GENERAL NOTES ON SHEET S1.0
2. REFER TO HEADER SCHEDULE ON SHEET S1.1
3. REFER TO ARCHITECTURAL DRAWINGS FOR DIMENSIONS NOT SHOWN
4. REFER TO SHEET S2.11 FOR SHEARWALL AND HOLDOWN INFORMATION
5. REFER TO SECTIONS 5A, 5B, 6A AND 6B ON SHEET S1.2 FOR HOLDOWN DETAILS AT THE SECOND FLOOR
6. PROVIDE TRIPLE STUDS AT ALL PRE-ENG. TRUSS GIRDERS
7. REFER TO SHEETS S1.0 AND S1.1 FOR TYPICAL NAILING WOOD FRAMING DETAILS

Architects Planners Designers
730 N. Ninth
P.O. BOX 2928
Salina, KS 67402
785.827.0386
1800 Wyandotte St.,
Suite 102
Kansas City, MO 64108
jgr@jgrarchitects.com
JONES GILLAM RENZ

ANGLERS FOUR HUNDRED

APARTMENT COMPLEX

STEAMBOAT SPRINGS, COLORADO

COLORADO LICENSED PROFESSIONAL ENGINEER
KEY LYLE WHITE
5/28/21

DATE: 5-28-2021
JOB: 19-3047
SHEET:

COPYRIGHTED ©

S2.5

BOB D. CAMPBELL & CO.
Structural Engineers Since 1957
4338 Belleview Ave. 816.531.4144
Kansas City, MO 64111 www.bdc-engrs.com

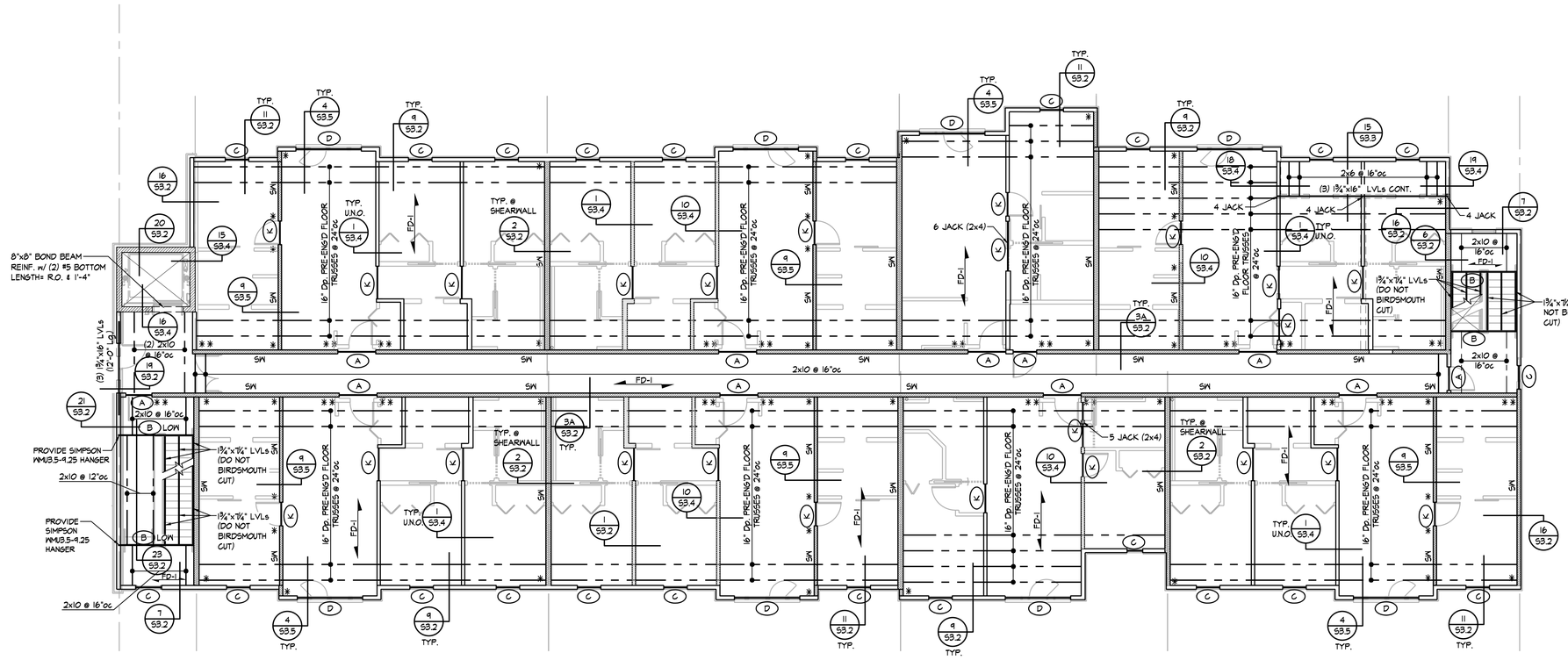

THIRD FLOOR FRAMING PLAN - BUILDING B

⅛" = 1'-0"

NOTES:

1. REFER TO GENERAL NOTES ON SHEET S1.0
2. REFER TO HEADER SCHEDULE ON SHEET S1.1
3. REFER TO ARCHITECTURAL DRAWINGS FOR DIMENSIONS NOT SHOWN
4. REFER TO SHEET S2.1.2 FOR SHEARWALL AND HOLDOWN INFORMATION
5. REFER TO SECTIONS 5A, 5B, 6A AND 6B ON SHEET S1.2 FOR HOLDOWN DETAILS AT THE SECOND FLOOR
6. PROVIDE TRIPLE STUDS AT ALL PRE-ENG. TRUSS GIRDERS
7. REFER TO SHEETS S1.0 AND S1.1 FOR TYPICAL NAILING WOOD FRAMING DETAILS

Architects Planners Designers
730 N. Ninth
P.O. BOX 2928
Salina, KS 67402
785.827.0386
1800 Wyandotte St.
Suite 102
Kansas City, MO 64108
jgr@jgrarchitects.com
JONES GILLAM RENZ

ANGLERS FOUR HUNDRED

APARTMENT COMPLEX

STEAMBOAT SPRINGS, COLORADO

COLORADO LICENSED KYLE W. [illegible] PROFESSIONAL ENGINEER 5-27-21

DATE: 5-28-2021
JOB: 19-3047
SHEET: S2.6

COPYRIGHTED©

BOB D. CAMPBELL & CO.
Structural Engineers Since 1957
4338 Belleview Ave. 816.531.4144
Kansas City, MO 64111 www.bdc-engrs.com

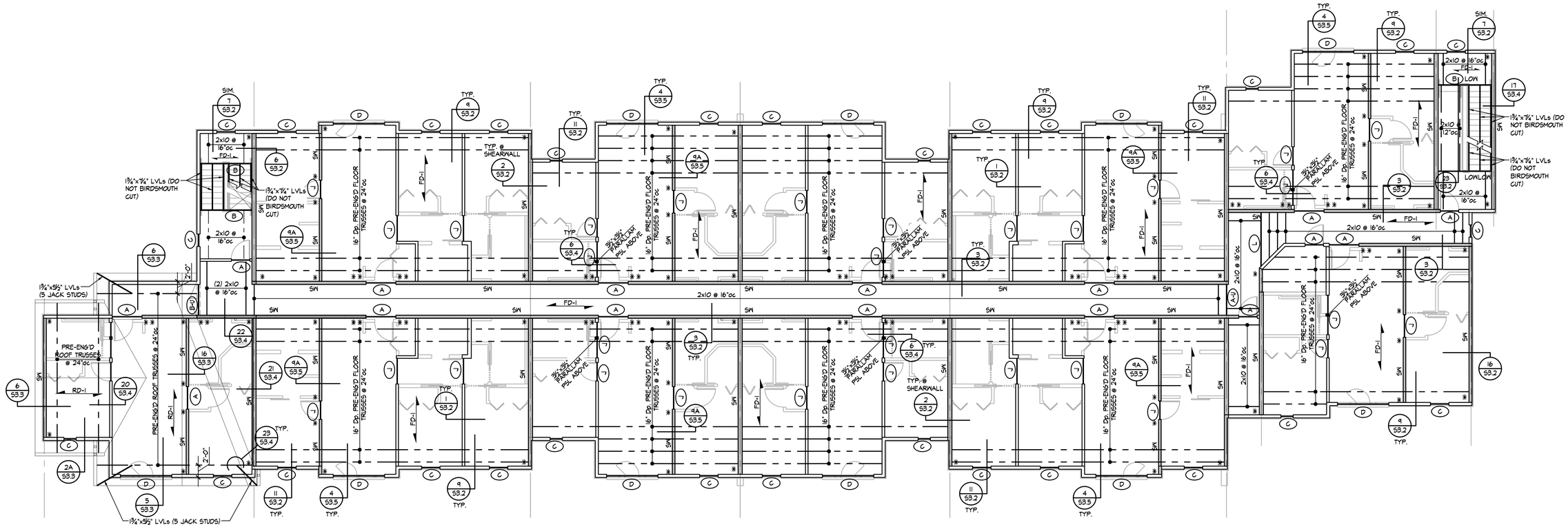

FOURTH FLOOR FRAMING PLAN - BUILDING A

1/8" = 1'-0"

NOTES:

1. REFER TO GENERAL NOTES ON SHEET S1.0
2. REFER TO HEADER SCHEDULE ON SHEET S1.1
3. REFER TO ARCHITECTURAL DRAWINGS FOR DIMENSIONS NOT SHOWN
4. REFER TO SHEET S2.11 FOR SHEARWALL AND HOLDOWN INFORMATION
5. REFER TO SECTIONS 5A, 5B, 6A AND 6B ON SHEET S1.2 FOR HOLDOWN DETAILS AT THE SECOND FLOOR
6. PROVIDE TRIPLE STUDS AT ALL PRE-ENG. TRUSS GIRDERS
7. REFER TO SHEETS S1.0 AND S1.1 FOR TYPICAL NAILING WOOD FRAMING DETAILS

Architects Planners Designers
730 N. Ninth
P.O. BOX 2928
Salina, KS 67402
785.827.0386
1800 Wyandotte St.,
Suite 102
Kansas City, MO 64108
jgr@jgrarchitects.com
JONES GILLAM RENZ

ANGLERS FOUR HUNDRED

APARTMENT COMPLEX

STEAMBOAT SPRINGS, COLORADO

COLORADO LICENSED
KYLE W. RENZ
PROFESSIONAL ENGINEER
5/28/21

DATE: 5-28-2021

JOB: 19-3047

SHEET: S2.7

COPYRIGHTED ©

BOB D. CAMPBELL & CO.
Structural Engineers Since 1957
4338 Belleview Ave. 816.531.4144
Kansas City, MO 64111 www.bdc-engrs.com

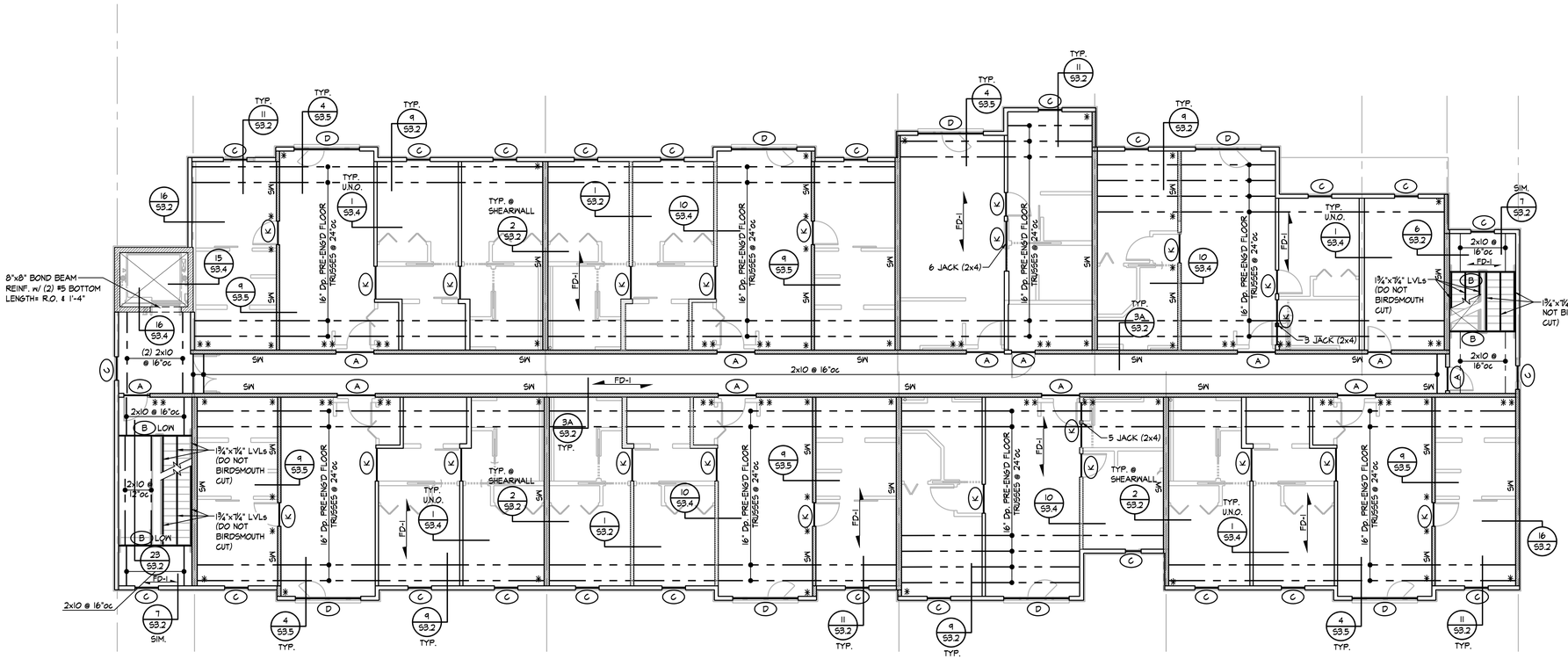

FOURTH FLOOR FRAMING PLAN - BUILDING B

⅛" = 1'-0"

NOTES:
1. REFER TO GENERAL NOTES ON SHEET S1.0
2. REFER TO HEADER SCHEDULE ON SHEET S1.1
3. REFER TO ARCHITECTURAL DRAWINGS FOR DIMENSIONS NOT SHOWN
4. REFER TO SHEET S2.12 FOR SHEARWALL AND HOLDOWN INFORMATION
5. REFER TO SECTIONS 5A, 5B, 6A AND 6B ON SHEET S1.2 FOR HOLDOWN DETAILS AT THE SECOND FLOOR
6. PROVIDE TRIPLE STUDS AT ALL PRE-ENG. TRUSS GIRDERS
7. REFER TO SHEETS S1.0 AND S1.1 FOR TYPICAL NAILING WOOD FRAMING DETAILS

Architects Planners Designers
1800 Wyandotte St., Suite 102
Kansas City, MO 64108
jgr@jgrarchitects.com
730 N. Ninth
P.O. BOX 2928
Salina, KS 67402
785.827.0386
JONES GILLAM RENZ

ANGLERS FOUR HUNDRED
APARTMENT COMPLEX
STEAMBOAT SPRINGS, COLORADO

COLORADO LICENSED
CASEY LYLE WARD
PROFESSIONAL ENGINEER
5/28/21

DATE: 5-28-2021
JOB: 19-3047
SHEET: S2.8

COPYRIGHTED ©

BOB D. CAMPBELL & CO.
Structural Engineers Since 1957
4338 Belleview Ave. 816.531.4144
Kansas City, MO 64111 www.bdc-engrs.com

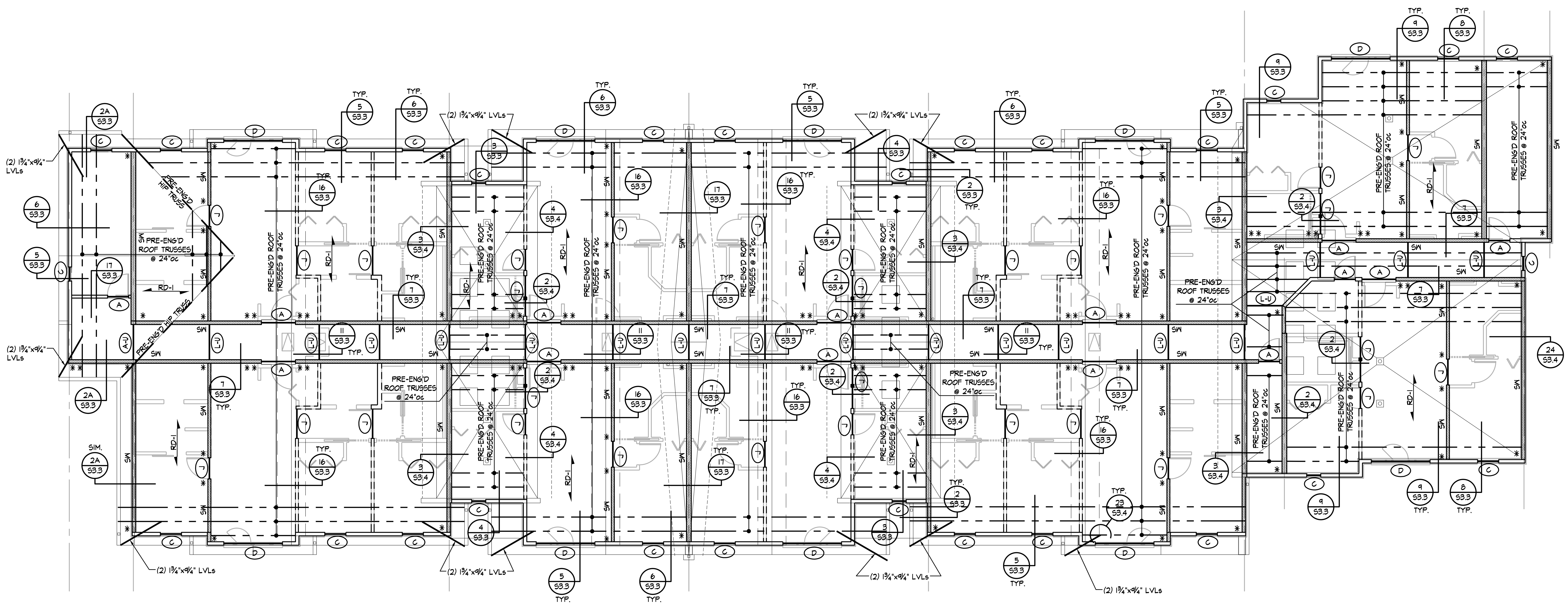

ROOF FRAMING PLAN - BUILDING A

⅛" = 1'-0"

NOTES:

1. REFER TO GENERAL NOTES ON SHEET S1.0
2. REFER TO HEADER SCHEDULE ON SHEET S1.1
3. REFER TO ARCHITECTURAL DRAWINGS FOR DIMENSIONS NOT SHOWN
4. PROVIDE TRIPLE STUDS AT ALL PRE-ENG. TRUSS GIRDERS (U.N.O.)
5. REFER TO SHEETS S1.0 AND S1.1 FOR TYPICAL NAILING WOOD FRAMING DETAILS

Architects Planners Designers
730 N. Ninth
P.O. BOX 2928
Salina, KS 67402
785.827.0386
1800 Wyandotte St., Suite 102
Kansas City, MO 64108
jgr@jgrarchitects.com
JONES GILLAM RENZ

ANGLERS FOUR HUNDRED

APARTMENT COMPLEX

STEAMBOAT SPRINGS, COLORADO

DATE: 5-28-2021

JOB: 19-3047

SHEET:

COPYRIGHTED©

S2.9

BOB D. CAMPBELL & CO.
Structural Engineers Since 1957
4338 Belleview Ave. 816.531.4144
Kansas City, MO 64111 www.bdc-engrs.com

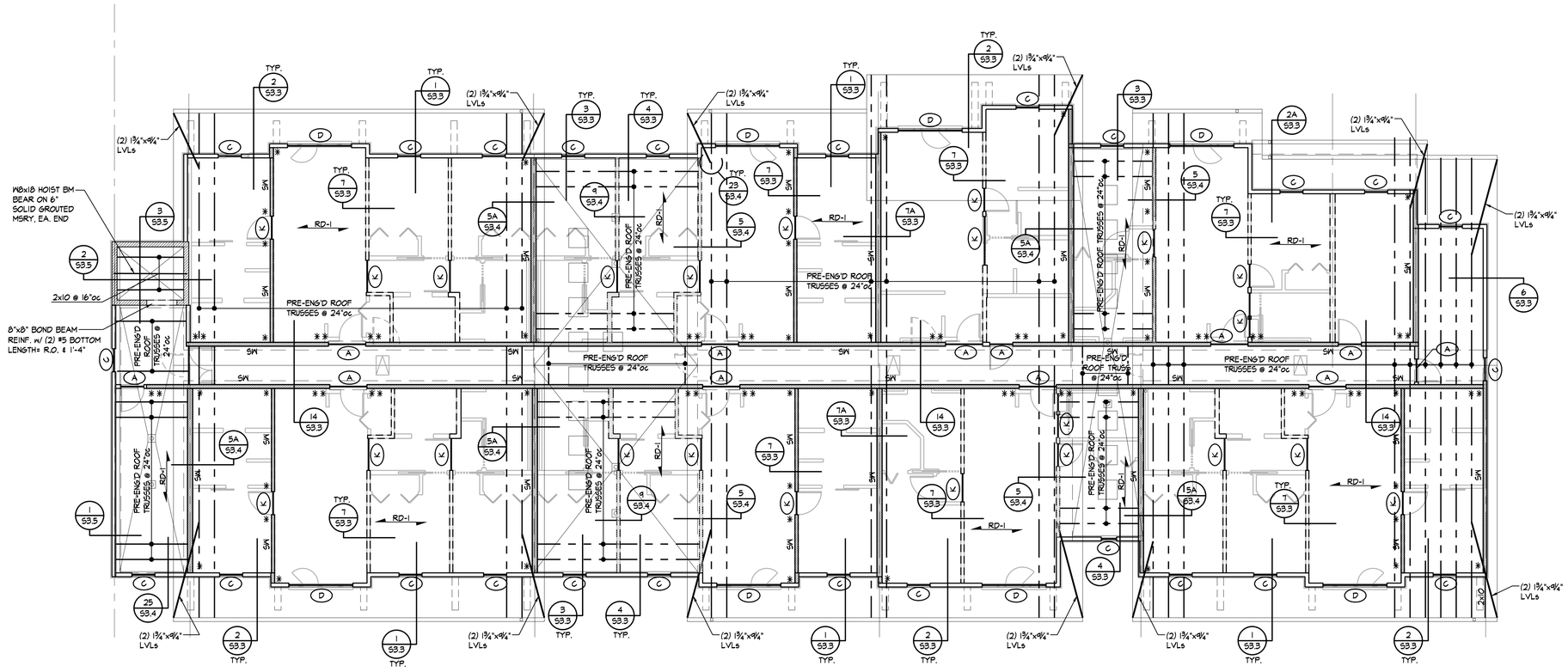

ROOF FRAMING PLAN - BUILDING B

⅛" = 1'-0"

NOTES:

1. REFER TO GENERAL NOTES ON SHEET S1.0
2. REFER TO HEADER SCHEDULE ON SHEET S1.1
3. REFER TO ARCHITECTURAL DRAWINGS FOR DIMENSIONS NOT SHOWN
4. PROVIDE TRIPLE STUDS AT ALL PRE-ENG. TRUSS GIRDERS (U.N.O.)
5. REFER TO SHEETS S1.0 AND S1.1 FOR TYPICAL NAILING WOOD FRAMING DETAILS

Architects Planners Designers
730 N. Ninth
P.O. BOX 2928
Salina, KS 67402
785.827.0386
1800 Wyandotte St.,
Suite 102
Kansas City, MO 64108
jgr@jgrarchitects.com
JONES GILLAM RENZ

ANGLERS FOUR HUNDRED

APARTMENT COMPLEX

STEAMBOAT SPRINGS, COLORADO

COLORADO LICENSED PROFESSIONAL ENGINEER
REY LYLE
5/28/21

DATE: 5-28-2021
JOB: 19-3047
SHEET:

COPYRIGHTED ©

S2.10

BOB D. CAMPBELL & CO.
Structural Engineers Since 1957
4338 Belleview Ave. 816.531.4144
Kansas City, MO 64111 www.bdc-engrs.com

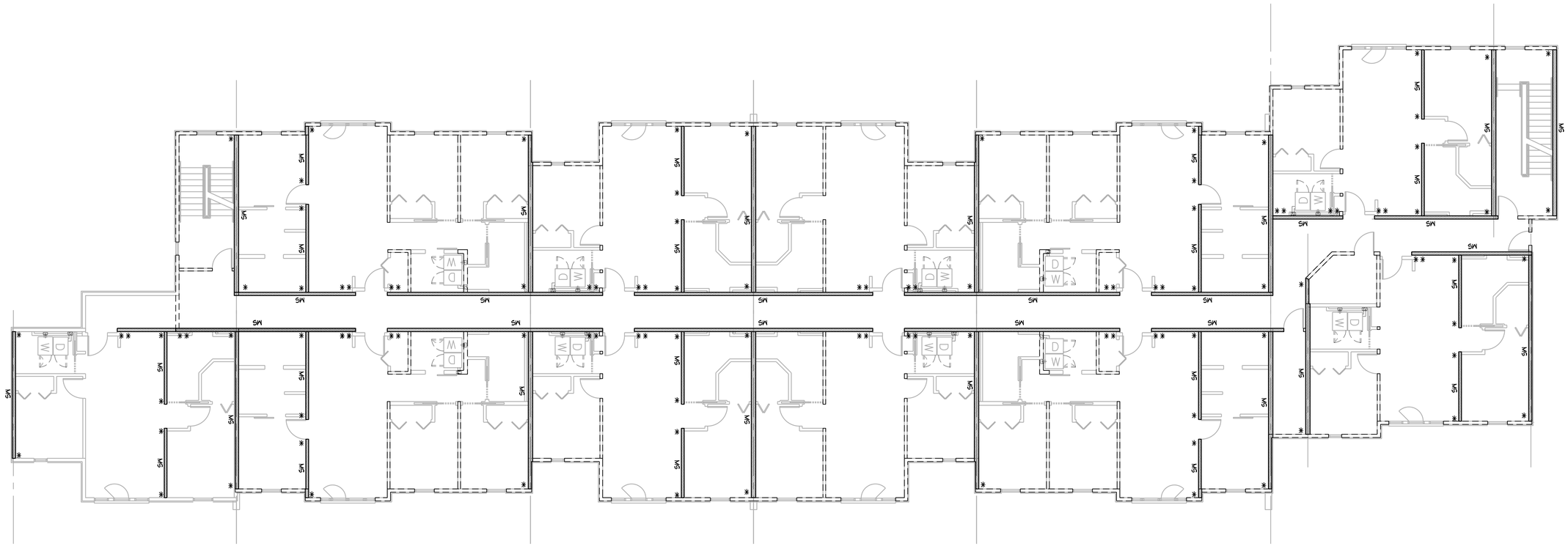

SHEARWALL PLAN - BUILDING A

1/8" = 1'-0"

NOTES:
1.) REFER TO GENERAL NOTES ON SHEET S1.0
2.) REFER TO SHEARWALL & HOLDOWN SCHEDULES ON SHEET S1.2
3.) SHEARWALLS/HOLDOWNS DESIGNATED AS FOLLOWS:

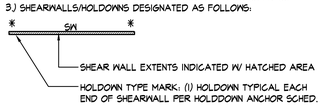

4.) REFER TO DETAILS 2/S1.2 & 3/S1.2 FOR HOLDOWNS AT END OF WALL

Architects Planners Designers
730 N. Ninth
P.O. BOX 2928
Salina, KS 67402
785.827.0386
1800 Wyandotte St.,
Suite 102
Kansas City, MO 64108
jgr@jgrarchitects.com
JONES GILLAM RENZ

ANGLERS FOUR HUNDRED

APARTMENT COMPLEX

STEAMBOAT SPRINGS, COLORADO

COLORADO LICENSED PROFESSIONAL ENGINEER
5/28/21

DATE: 5-28-2021
JOB: 19-3047
SHEET: S2.11

COPYRIGHTED ©

BOB D. CAMPBELL & CO.
Structural Engineers Since 1957
4338 Belleview Ave. 816.531.4144
Kansas City, MO 64111 www.bdc-engrs.com

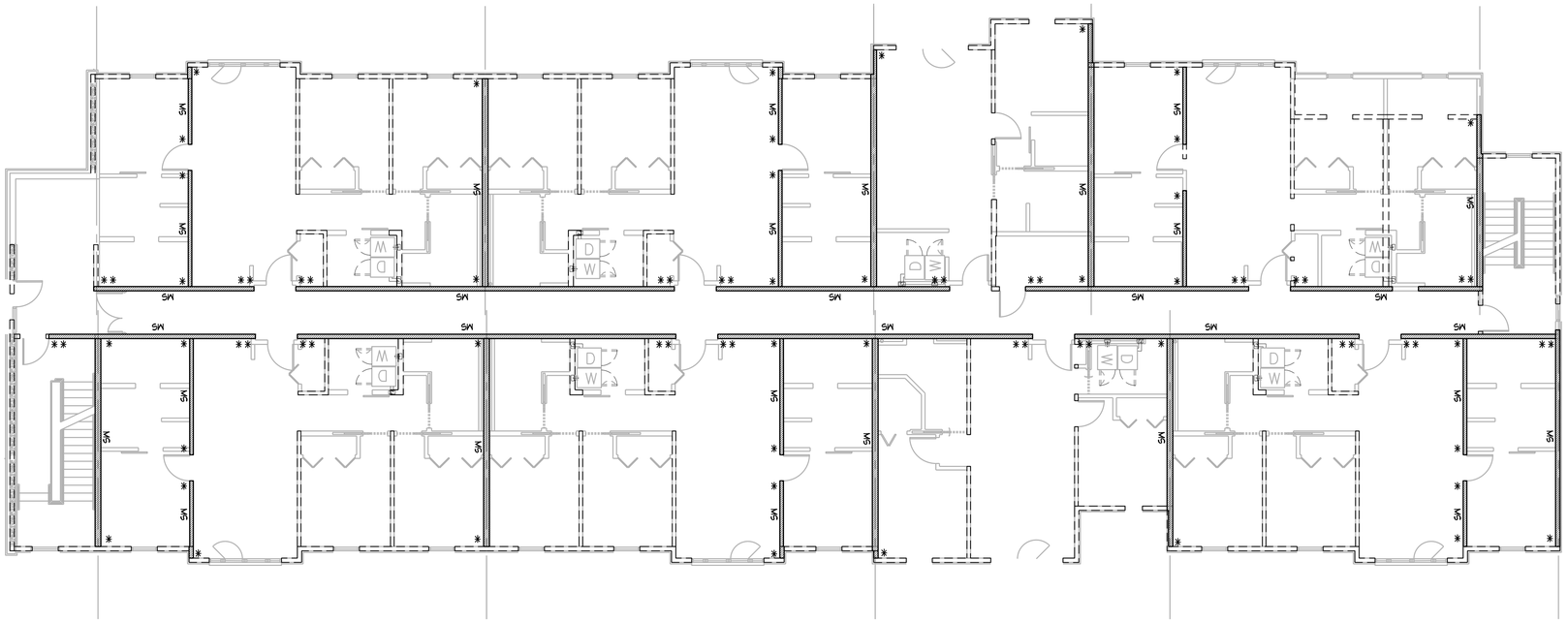

SHEARWALL PLAN - BUILDING B

1/8" = 1'-0"

NOTES:
1.) REFER TO GENERAL NOTES ON SHEET S1.0
2.) REFER TO SHEARWALL & HOLDOWN SCHEDULES ON SHEET S1.2
3.) SHEARWALLS/HOLDOWNS DESIGNATED AS FOLLOWS:

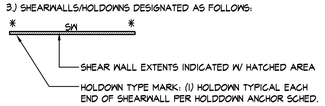

4.) REFER TO DETAILS 2/S1.2 & 3/S1.2 FOR HOLDOWNS AT END OF WALL

Architects Planners Designers
730 N. Ninth
P.O. BOX 2928
Salina, KS 67402
785.827.0386
1800 Wyandotte St.,
Suite 102
Kansas City, MO 64108
jgr@jgrarchitects.com
JONES GILLAM RENZ

ANGLERS FOUR HUNDRED

APARTMENT COMPLEX

STEAMBOAT SPRINGS, COLORADO

COLORADO LICENSED PROFESSIONAL ENGINEER 5/28/21

DATE: 5-28-2021
JOB: 19-3047
SHEET: S2.12

COPYRIGHTED ©

NOTE: ANY OR ALL SAWED JOINTS MAY BE FORMED PER SECTION 2/S3.1 AT CONTRACTORS OPTION

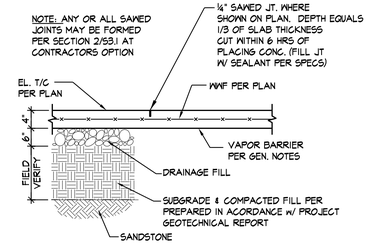

TYPICAL SAW JOINT NOTED "SJ" ON PLAN

SECTION 1 / S3.1
¾" = 1'-0"

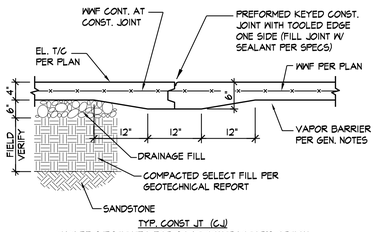

TYP. CONST JT. (CJ)
MAY BE SUBSTITUTED FOR SJ AT CONTRACTOR'S OPTION

SECTION 2 / S3.1
¾" = 1'-0"

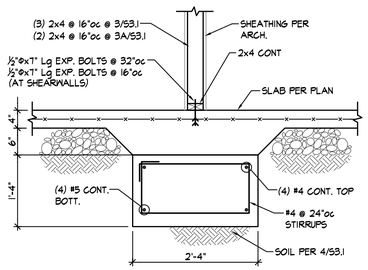

TYP. THICKENED SLAB @ INT. BRG. WALL

SECTION 3 / S3.1 and 3A / S3.1
¾" = 1'-0"

NOTE: PROVIDE (3) #4x4'-0" (3'-4" lap) & (3) #5x5'-0" (4'-2" lap) AT PERIMETERS

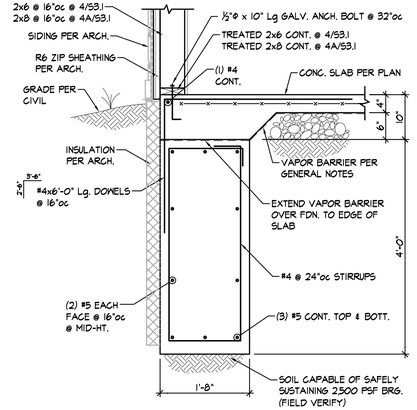

SECTION 4 / S3.1 and 4A / S3.1
¾" = 1'-0"

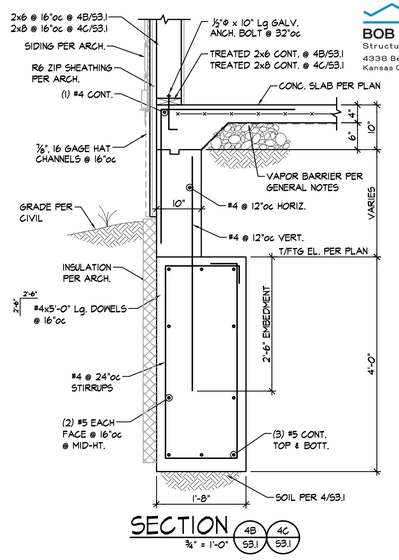

SECTION 4B / S3.1 and 4C / S3.1
¾" = 1'-0"

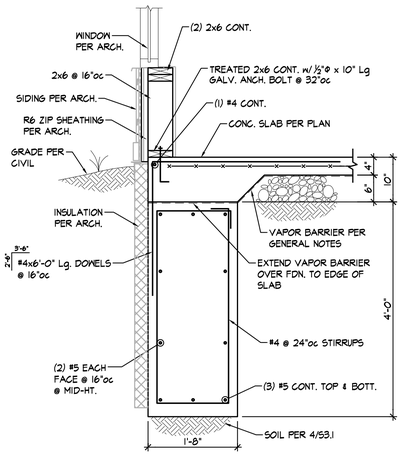

SECTION 5 / S3.1
¾" = 1'-0"

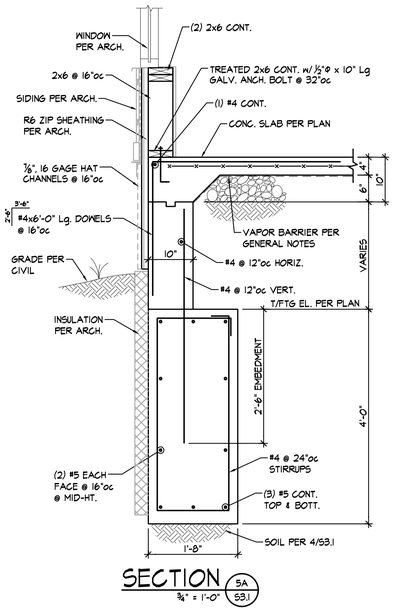

SECTION 5A / S3.1
¾" = 1'-0"

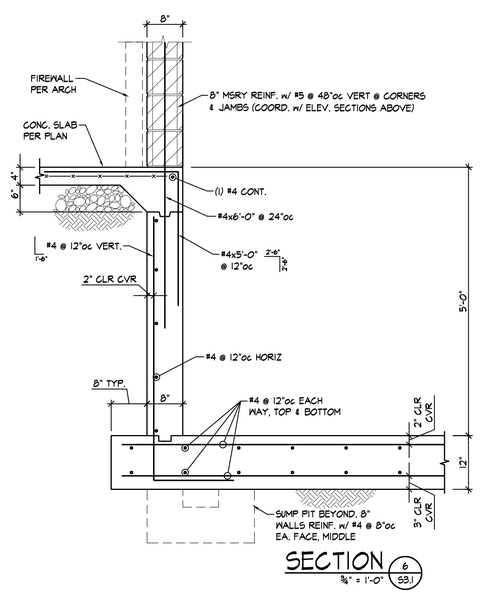

SECTION 6 / S3.1
¾" = 1'-0"

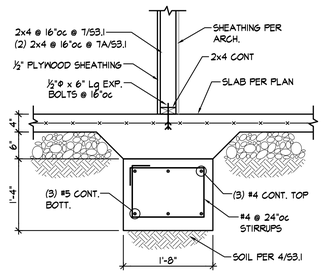

TYP. THICKENED SLAB @ CORRIDOR SHEARWALL

SECTION 7 / S3.1 and 7A / S3.1
¾" = 1'-0"

NOTES:
1. AT ENDS OF SHEARWALLS, PROVIDE SIMPSON HD5-5DS2.5 HOLDDOWN ANCHOR w/ DBL STUD & ⅞"Ø x 7"Lg EXP. BOLT & (3) #5x5'-0" (4'-2" lap)
2. PROVIDE (3) #4x4'-0" (3'-4" lap) AT PERIMETERS

TYP. THICKENED SLAB @ DEMISING WALL SHEARWALL
LABELED "SW" ON PLAN

SECTION 8 / S3.1
¾" = 1'-0"

NOTE: PROVIDE (3) #4x4'-0" (3'-4" lap) & (3) #5x5'-0" (4'-2" lap) AT PERIMETERS

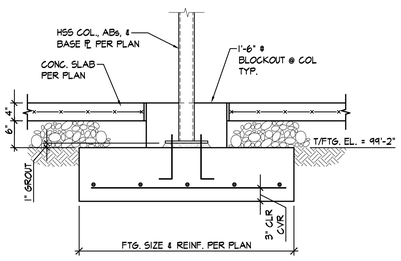

SECTION 9 / S3.1
¾" = 1'-0"

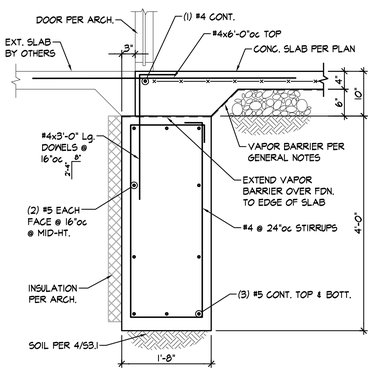

SECTION 10 / S3.1
¾" = 1'-0"

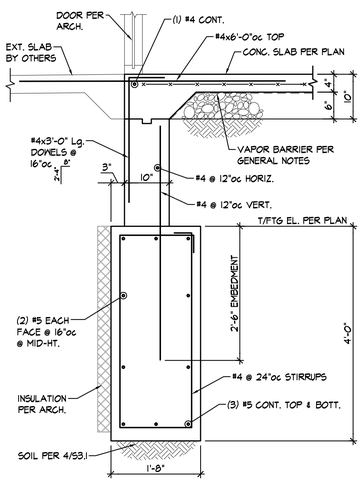

SECTION 10A / S3.1
¾" = 1'-0"

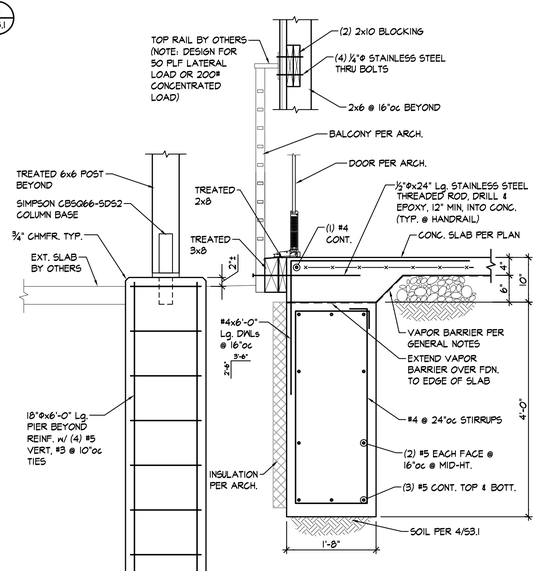

SECTION 11 / S3.1
¾" = 1'-0"

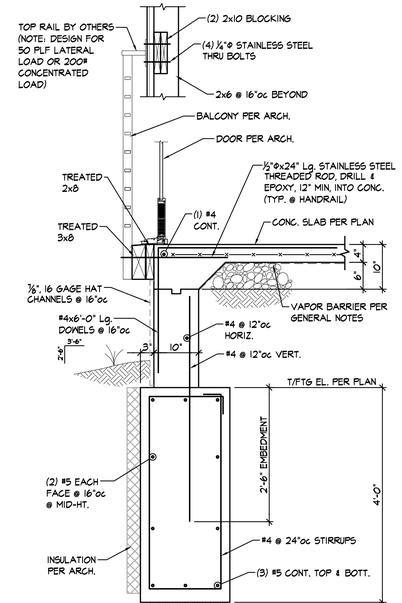

SECTION 11A / S3.1
¾" = 1'-0"

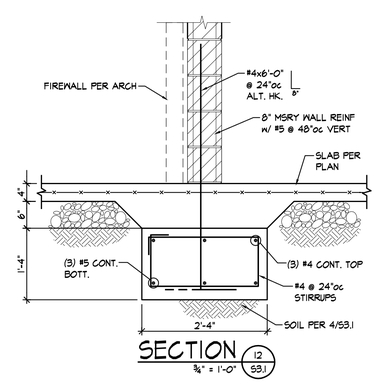

SECTION 12 / S3.1
¾" = 1'-0"

BOB D. CAMPBELL & CO.
Structural Engineers Since 1957
4338 Belleview Ave. 816.531.4144
Kansas City, MO 64111 www.bdc-engrs.com

Architects Planners Designers
730 N. Ninth Suite 102
P.O. BOX 2928 Kansas City, MO 64108
Salina, KS 67402
785.827.0366
jgr@jgrarchitects.com
JONES GILLAM RENZ

ANGLERS FOUR HUNDRED

APARTMENT COMPLEX

STEAMBOAT SPRINGS, COLORADO

COLORADO LICENSED
TROY LYLE WALKER
5/28/21
PROFESSIONAL ENGINEER

DATE: 5-28-2021
JOB: 19-3047
SHEET: S3.1

COPYRIGHTED ©

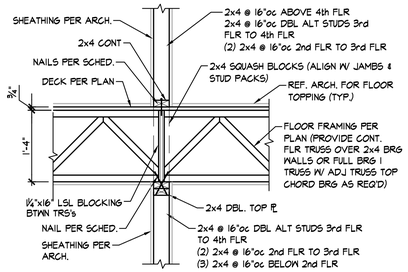

SECTION 1 S3.2
¾" = 1'-0"

NOTE: STUDS TYPICAL AT BUILDING A AND ROOF BRG TRUSSES AT BUILDING B

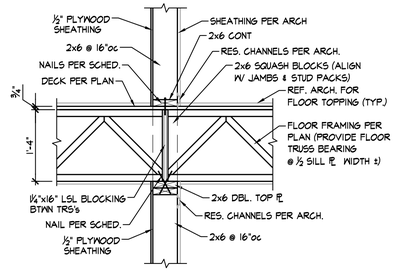

SECTION 2 S3.2
¾" = 1'-0"

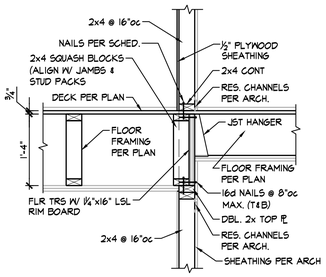

SECTION 3 S3.2
¾" = 1'-0"

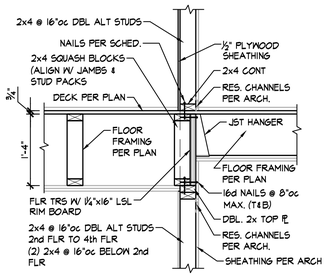

SECTION 3A S3.2
¾" = 1'-0"

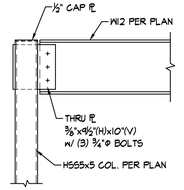

SECTION 5 S3.2
¾" = 1'-0"

NOTE: WOOD FRAMING OMITTED FOR CLARITY.

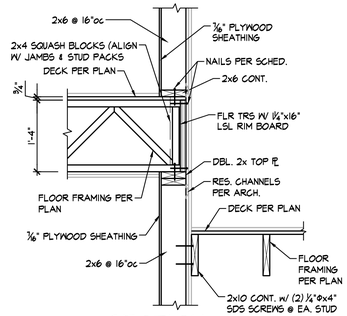

SECTION 6 S3.2
¾" = 1'-0"

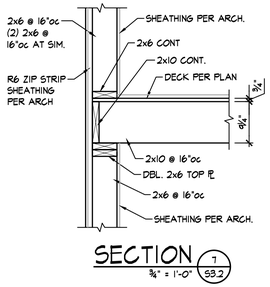

SECTION 7 S3.2
¾" = 1'-0"

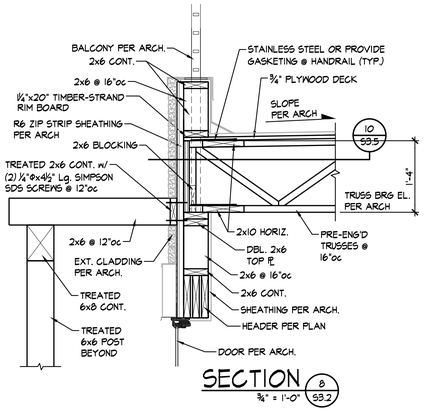

SECTION 8 S3.2
¾" = 1'-0"

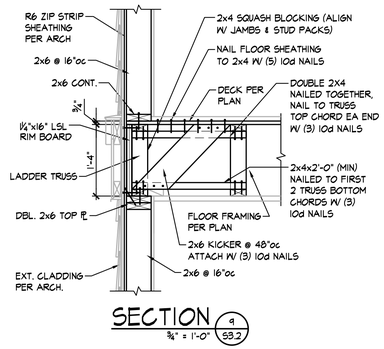

SECTION 9 S3.2
¾" = 1'-0"

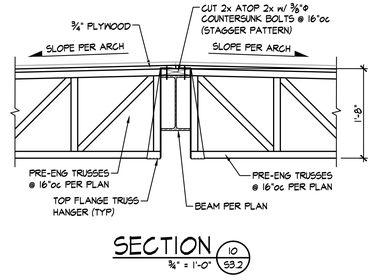

SECTION 10 S3.2
¾" = 1'-0"

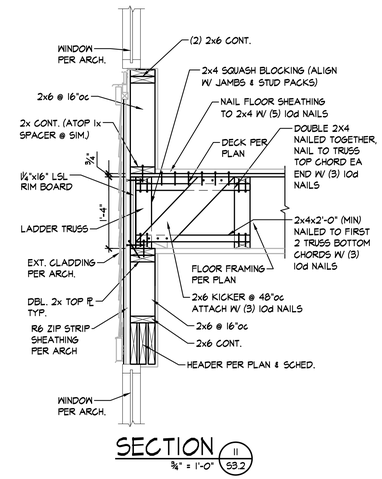

SECTION 11 S3.2
¾" = 1'-0"

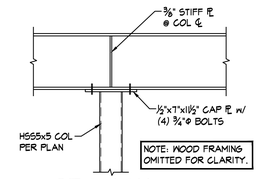

SECTION 12 S3.2
¾" = 1'-0"

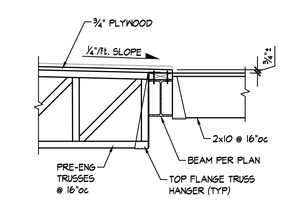

SECTION 14 S3.2
¾" = 1'-0"

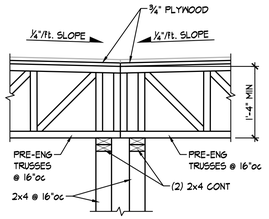

SECTION 15 S3.2
¾" = 1'-0"

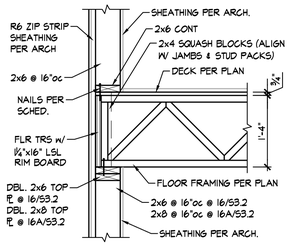

SECTION 16 16A S3.2
¾" = 1'-0"

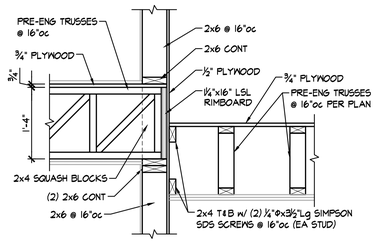

SECTION 17 S3.2
¾" = 1'-0"

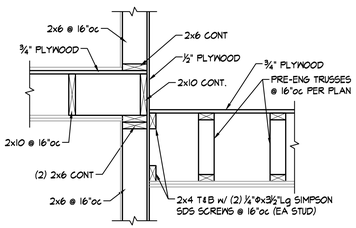

SECTION 17A S3.2
¾" = 1'-0"

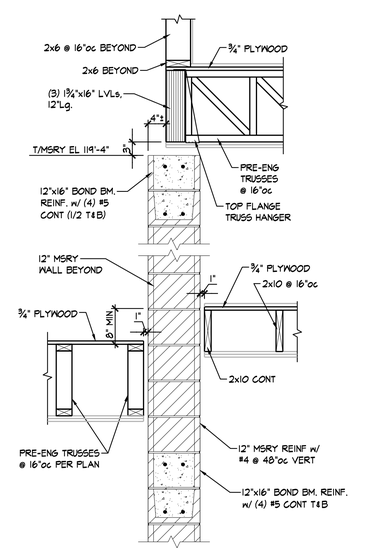

SECTION 18 S3.2
¾" = 1'-0"

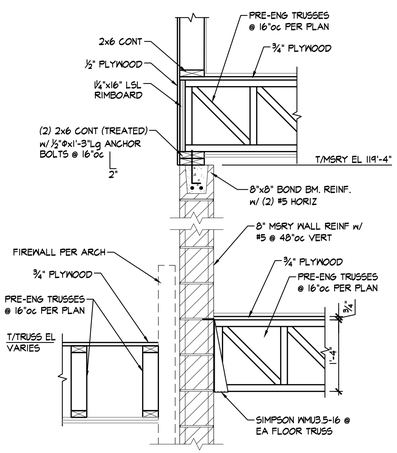

SECTION 19 S3.2
¾" = 1'-0"

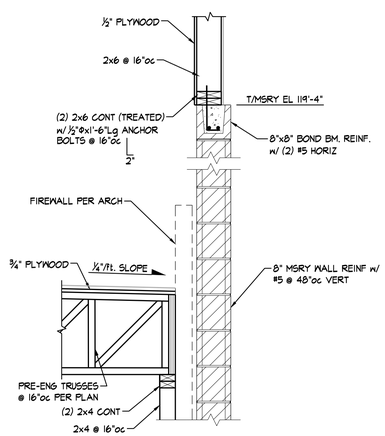

SECTION 20 S3.2
¾" = 1'-0"

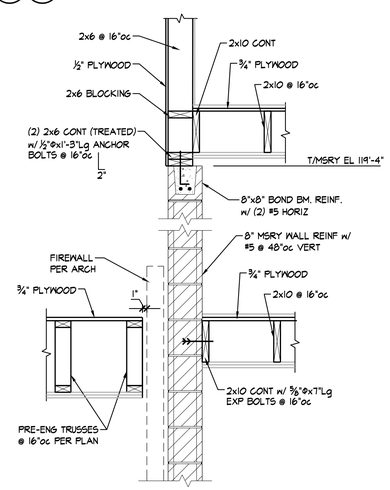

SECTION 21 S3.2
¾" = 1'-0"

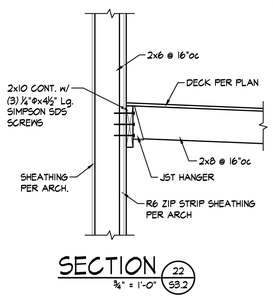

SECTION 22 S3.2
¾" = 1'-0"

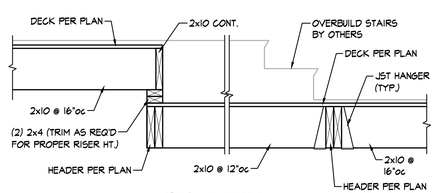

SECTION 23 S3.2
¾" = 1'-0"

BOB D. CAMPBELL & CO.
Structural Engineers Since 1957
4338 Belleview Ave. 816.531.4144
Kansas City, MO 64111 www.bdc-engrs.com

Architects Planners Designers
730 N. Ninth
P.O. BOX 2928
Salina, KS 67402
785.827.0366
1800 Wyandotte St.,
Suite 102
Kansas City, MO 64108
jgr@jgrarchitects.com
JONES GILLAM RENZ

ANGLERS FOUR HUNDRED
APARTMENT COMPLEX
STEAMBOAT SPRINGS, COLORADO

COLORADO LICENSED
REY LYLE WATT
PROFESSIONAL ENGINEER
5-28-21

DATE: 5-28-2021
JOB: 19-3047
SHEET: S3.2

COPYRIGHTED ©

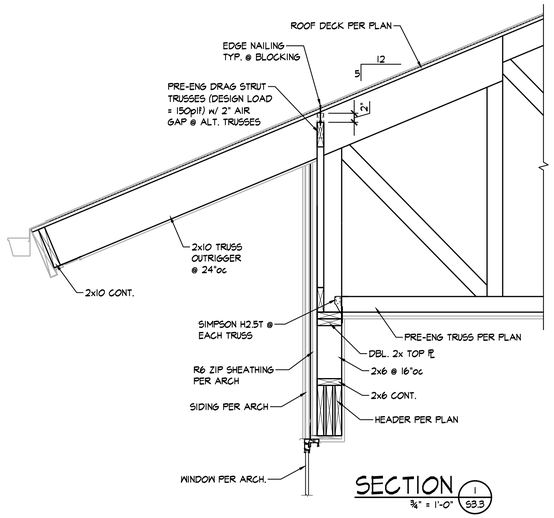

SECTION 1 — 3/4" = 1'-0" — 53.3

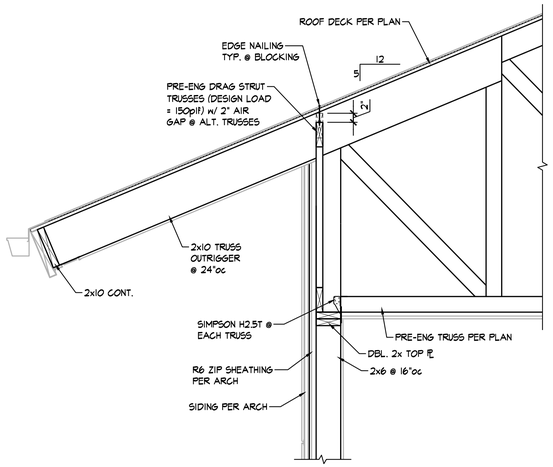

SECTION 2 — 3/4" = 1'-0" — 53.3

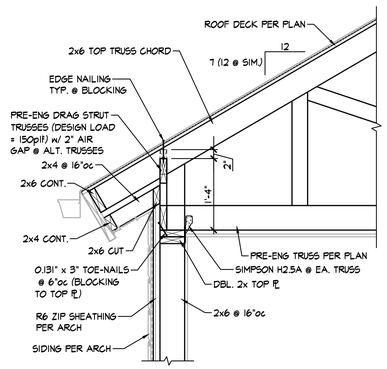

SECTION 2A — 3/4" = 1'-0" — 53.3

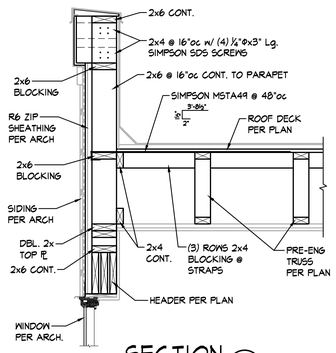

SECTION 3 — 3/4" = 1'-0" — 53.3

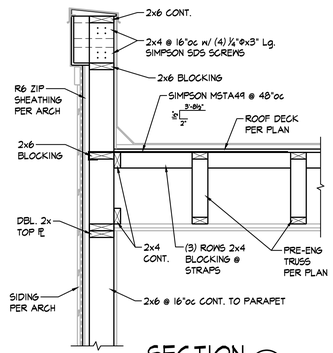

SECTION 4 — 3/4" = 1'-0" — 53.3

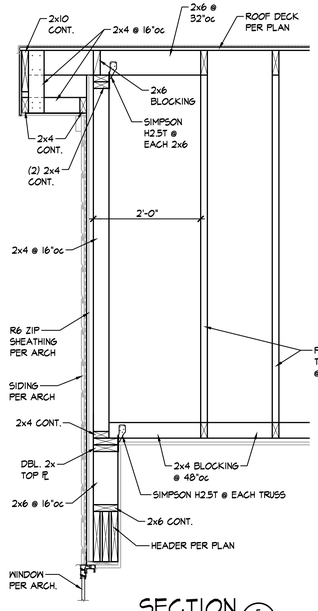

SECTION 5 — 3/4" = 1'-0" — 53.3

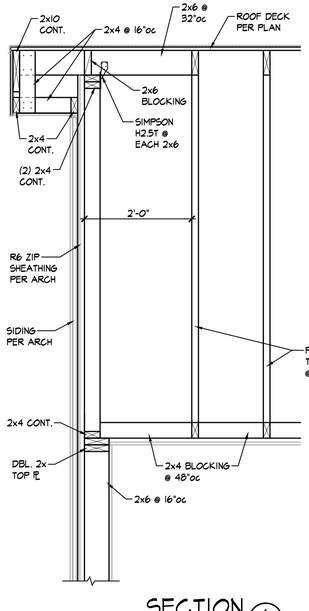

SECTION 6 — 3/4" = 1'-0" — 53.3

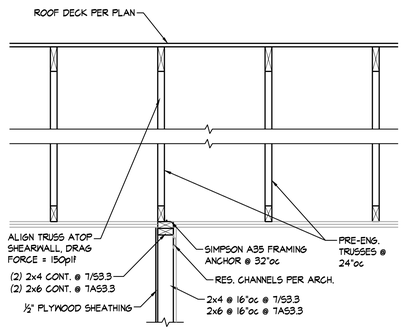

SECTION 7 7A — 3/4" = 1'-0" — 53.3 53.3

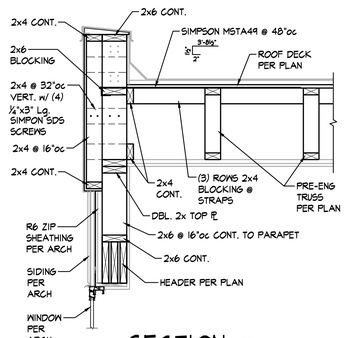

SECTION 8 — 3/4" = 1'-0" — 53.3

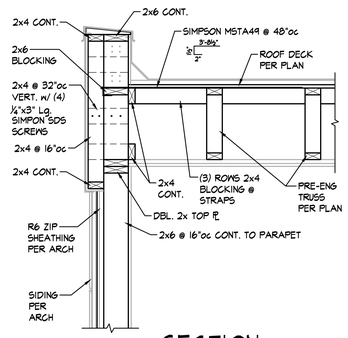

SECTION 9 — 3/4" = 1'-0" — 53.3

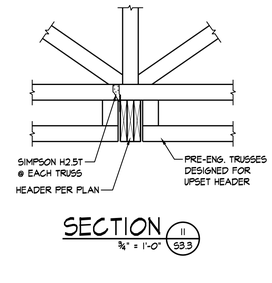

SECTION 11 — 3/4" = 1'-0" — 53.3

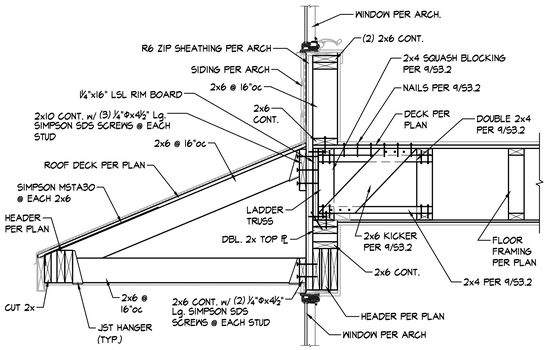

SECTION 12 — 3/4" = 1'-0" — 53.3

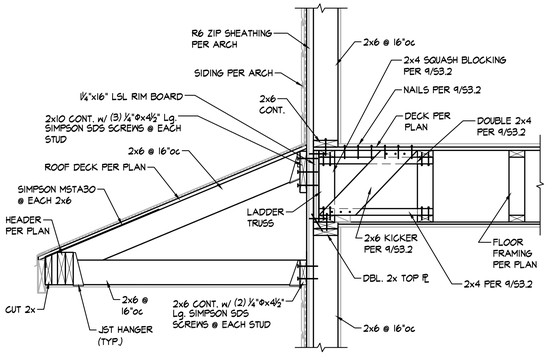

SECTION 13 — 3/4" = 1'-0" — 53.3

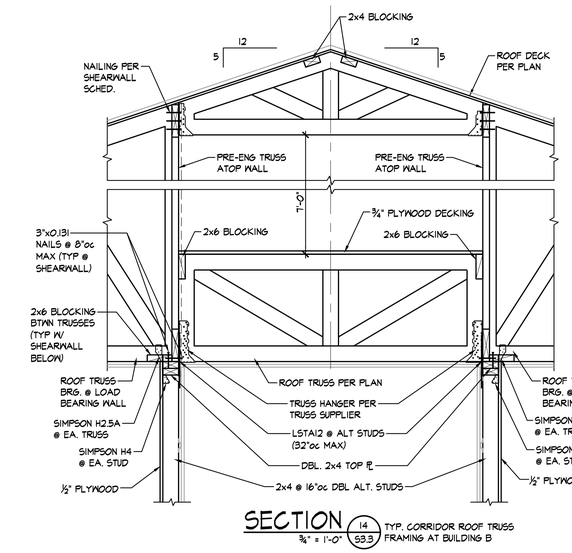

SECTION 14 — 3/4" = 1'-0" — 53.3 — TYP. CORRIDOR ROOF TRUSS FRAMING AT BUILDING B

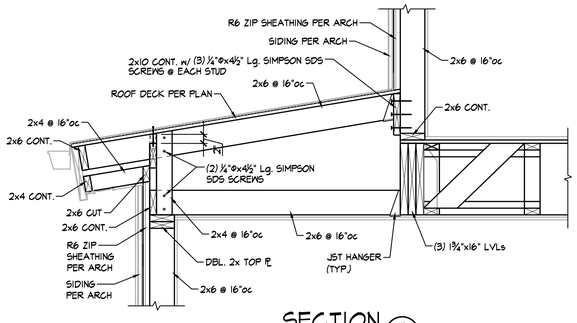

SECTION 15 — 3/4" = 1'-0" — 53.3

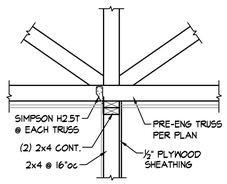

SECTION 16 — 3/4" = 1'-0" — 53.3

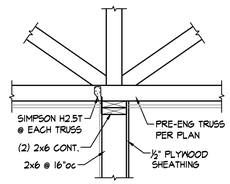

SECTION 17 — 3/4" = 1'-0" — 53.3

BOB D. CAMPBELL & CO.
Structural Engineers Since 1957
4338 Belleview Ave. 816.531.4144
Kansas City, MO 64111 www.bdc-engrs.com

Architects Planners Designers
1800 Wyandotte St., Suite 102
Kansas City, MO 64108
730 N. Ninth
P.O. BOX 2928
Salina, KS 67402
785.827.0386
jgr@jgrarchitects.com
JONES GILLAM RENZ

ANGLERS FOUR HUNDRED

APARTMENT COMPLEX

STEAMBOAT SPRINGS, COLORADO

COLORADO LICENSED — JEFF LYLE WILLIAMS — 37.5.28.21 — PROFESSIONAL ENGINEER

DATE: 5-28-2021

JOB: 19-3047

SHEET: S3.3

COPYRIGHTED ©

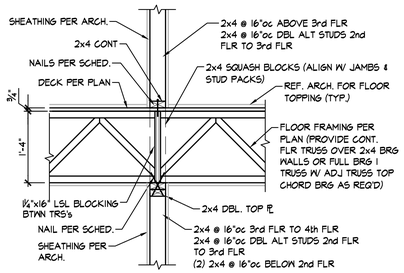

TYPICAL NON-ROOF BRG. WALLS

SECTION 1 — ¾" = 1'-0" — 53.4

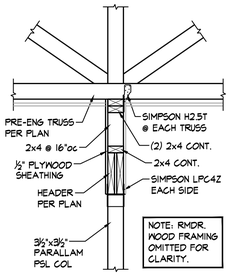

SECTION 2 — ¾" = 1'-0" — 53.4

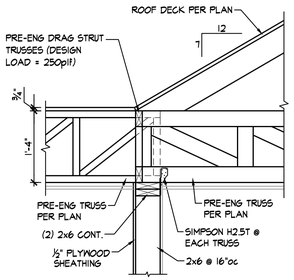

SECTION 3 — ¾" = 1'-0" — 53.4

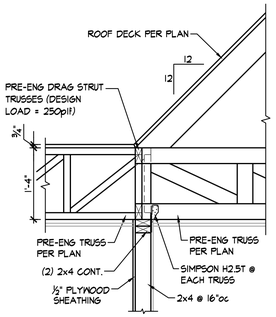

SECTION 4 — ¾" = 1'-0" — 53.4

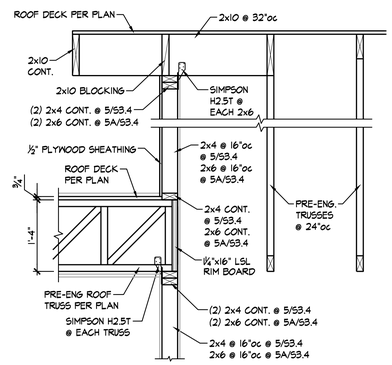

SECTION 5 5A — ¾" = 1'-0" — 53.4 53.4

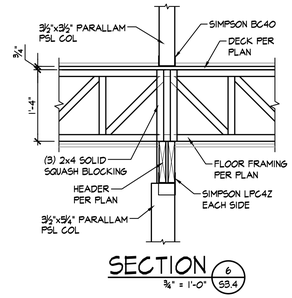

SECTION 6 — ¾" = 1'-0" — 53.4

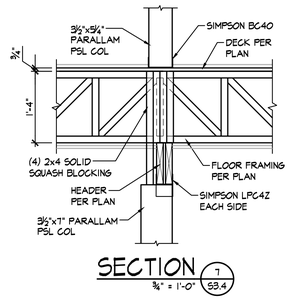

SECTION 7 — ¾" = 1'-0" — 53.4

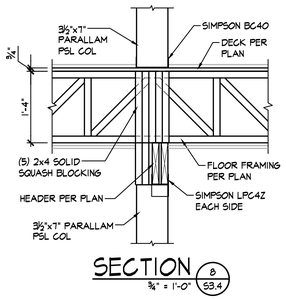

SECTION 8 — ¾" = 1'-0" — 53.4

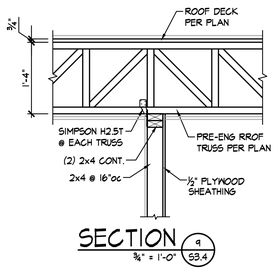

SECTION 9 — ¾" = 1'-0" — 53.4

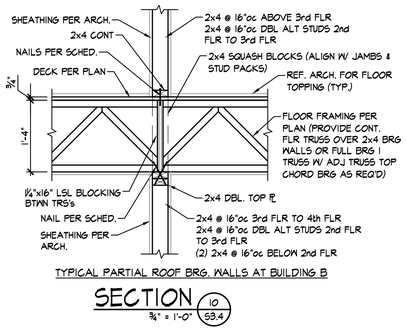

TYPICAL PARTIAL ROOF BRG. WALLS AT BUILDING B

SECTION 10 — ¾" = 1'-0" — 53.4

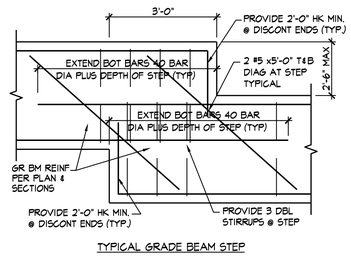

TYPICAL GRADE BEAM STEP

SECTION 11 — ½" = 1'-0" — 53.4

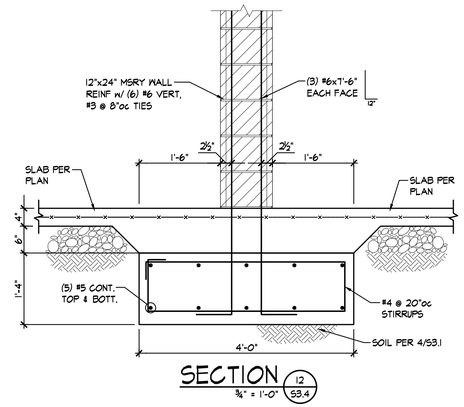

SECTION 12 — ¾" = 1'-0" — 53.4

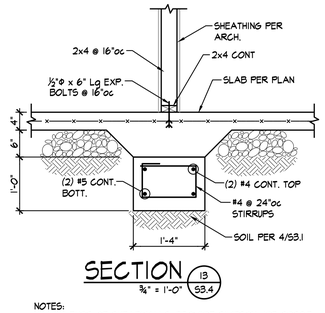

SECTION 13 — ¾" = 1'-0" — 53.4

NOTES:
1. AT ENDS OF SHEARWALLS, PROVIDE SIMPSON HDS-5DS2.5 HOLDDOWN ANCHOR w/ DBL STUD & ⅜"ø x 7"Lg EXP. BOLT
2. PROVIDE (3) #4x4'-0" 3'-4" & (3) #5x5'-0" 4'-2" AT PERIMETERS

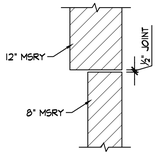

DETAIL 14 — ¾" = 1'-0" — 53.4

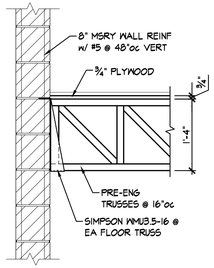

SECTION 15 — ¾" = 1'-0" — 53.4

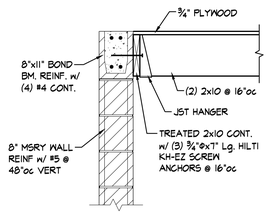

SECTION 16 — ¾" = 1'-0" — 53.4

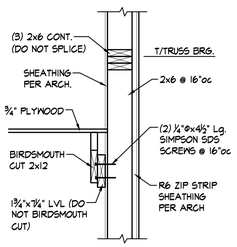

SECTION 17 — ¾" = 1'-0" — 53.4

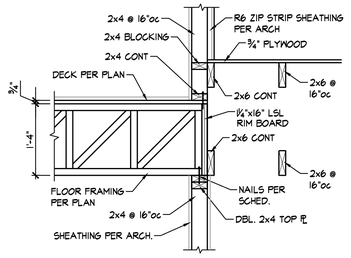

SECTION 18 — ¾" = 1'-0" — 53.4

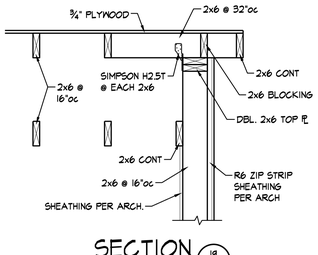

SECTION 19 — ¾" = 1'-0" — 53.4

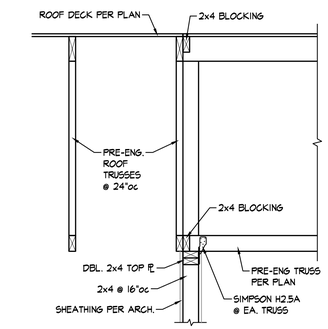

SECTION 20 — ¾" = 1'-0" — 53.4

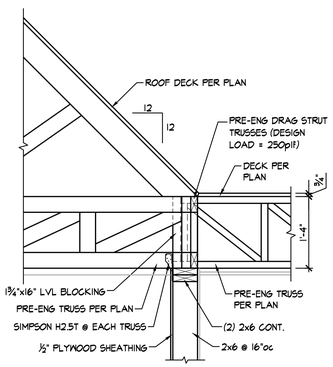

SECTION 21 — ¾" = 1'-0" — 53.4

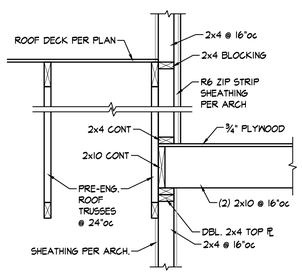

SECTION 22 — ¾" = 1'-0" — 53.4

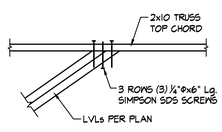

DETAIL 23 — ¾" = 1'-0" — 53.4

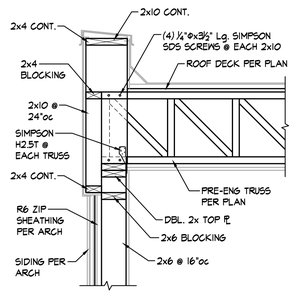

SECTION 24 — ¾" = 1'-0" — 53.4

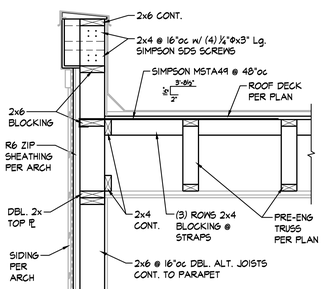

SECTION 25 — ¾" = 1'-0" — 53.4

BOB D. CAMPBELL & CO.
Structural Engineers Since 1957
4338 Belleview Ave. 816.531.4144
Kansas City, MO 64111 www.bdc-engrs.com

Architects Planners Designers
730 N. Ninth
P.O. BOX 2928
Salina, KS 67402
785.827.0386
1800 Wyandotte St.,
Suite 102
Kansas City, MO 64108
jgr@jgrarchitects.com
JONES GILLAM RENZ

ANGLERS FOUR HUNDRED

APARTMENT COMPLEX

STEAMBOAT SPRINGS, COLORADO

COLORADO LICENSED PROFESSIONAL ENGINEER — 5/28/21

DATE: 5-28-2021
JOB: 19-3047
SHEET: S3.4

COPYRIGHTED©

BOB D. CAMPBELL & CO.
Structural Engineers Since 1957
4338 Belleview Ave. 816.531.4144
Kansas City, MO 64111 www.bdc-engrs.com

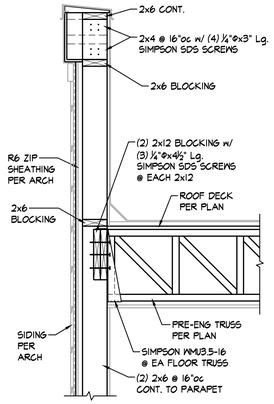

SECTION 1 S3.5
¾" = 1'-0"

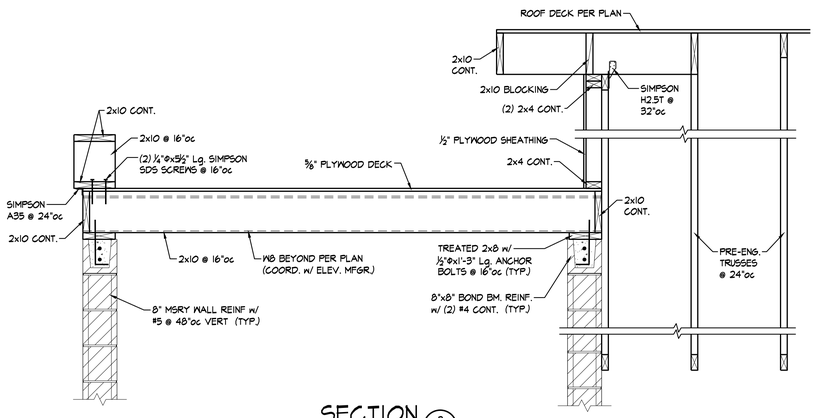

SECTION 2 S3.5
¾" = 1'-0"

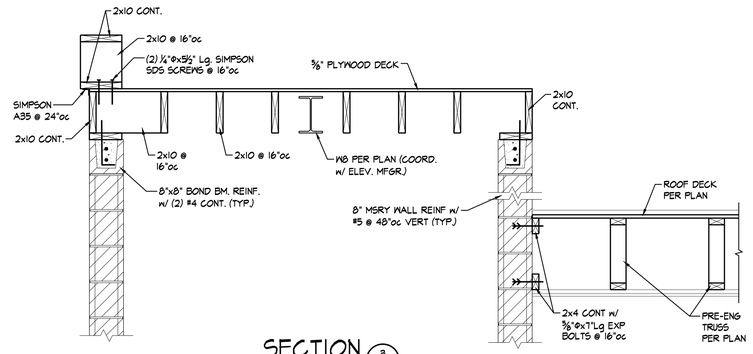

SECTION 3 S3.5
¾" = 1'-0"

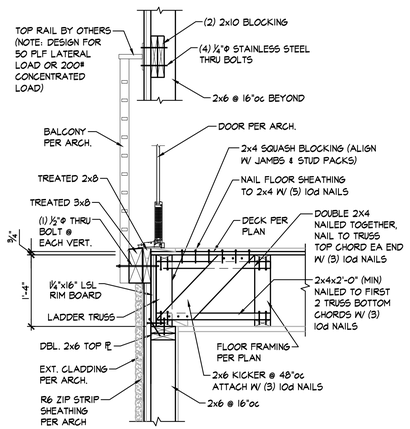

SECTION 4 S3.5
¾" = 1'-0"

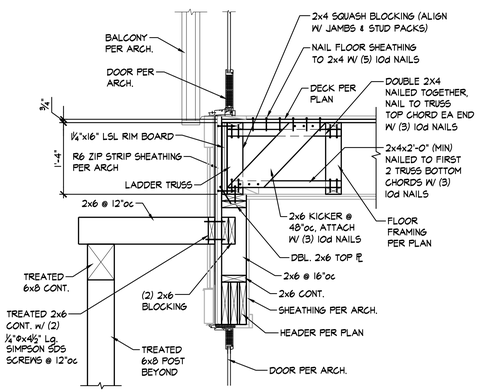

SECTION 5 S3.5
¾" = 1'-0"

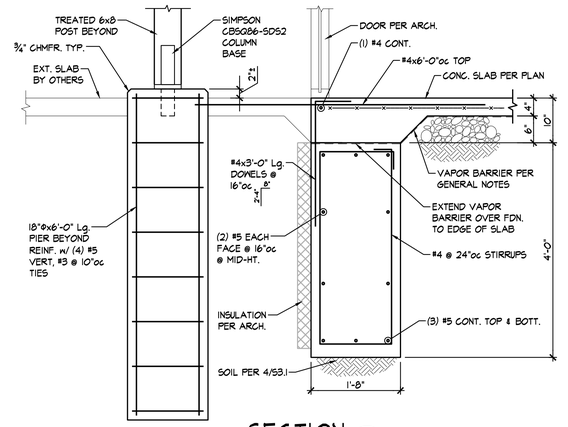

SECTION 6 S3.5
¾" = 1'-0"

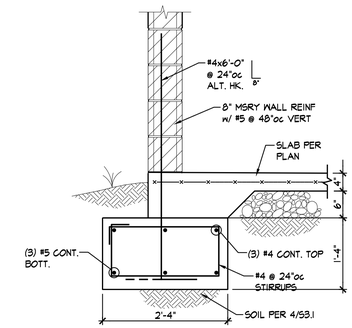

SECTION 7 S3.5
¾" = 1'-0"

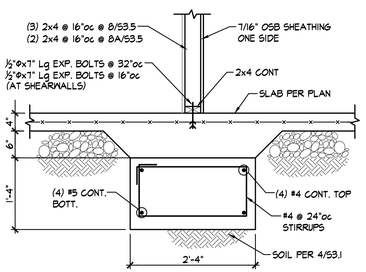

SECTION B 8A S3.5
¾" = 1'-0"

NOTE: PROVIDE (3) #4x4'-0" & (3) #5x5'-0" AT PERIMETERS
3'-4"
4'-0"

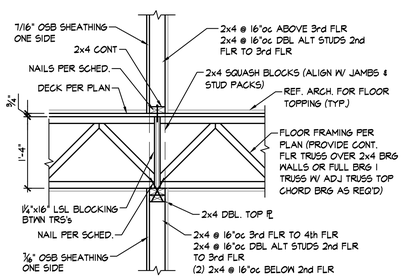

SECTION 9 S3.5
¾" = 1'-0"

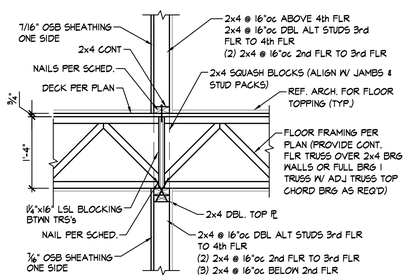

SECTION 9A S3.5
¾" = 1'-0"

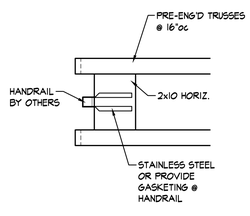

DETAIL 10 S3.5
¾" = 1'-0"

Architects Planners Designers
730 N. Ninth
P.O. BOX 2928
Salina, KS 67402
785.827.0386
1800 Wyandotte St.,
Suite 102
Kansas City, MO 64108
jgr@jgrarchitects.com
JONES GILLAM RENZ

ANGLERS FOUR HUNDRED
APARTMENT COMPLEX
STEAMBOAT SPRINGS, COLORADO

COLORADO LICENSED PROFESSIONAL ENGINEER
5/28/21

DATE: 5-28-2021
JOB: 19-3047
SHEET: S3.5

COPYRIGHTED©

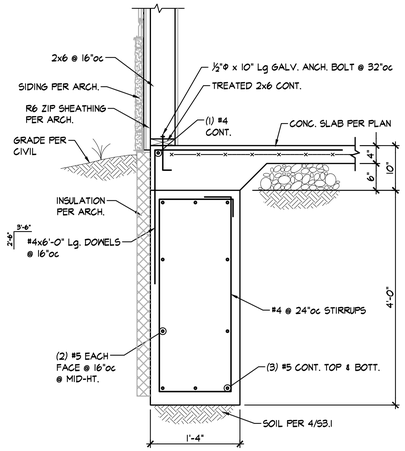

SECTION 1/S4.1
¾" = 1'-0"

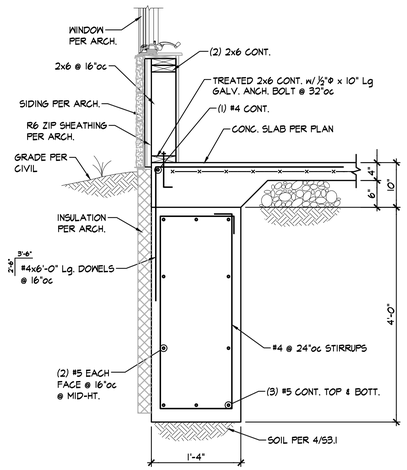

SECTION 2/S4.1
¾" = 1'-0"

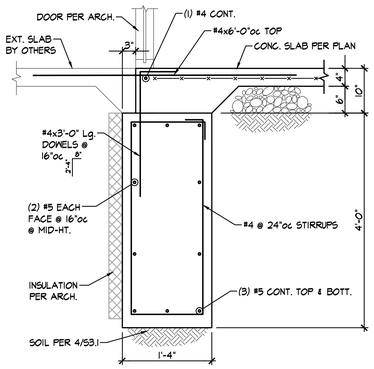

SECTION 3/S4.1
¾" = 1'-0"

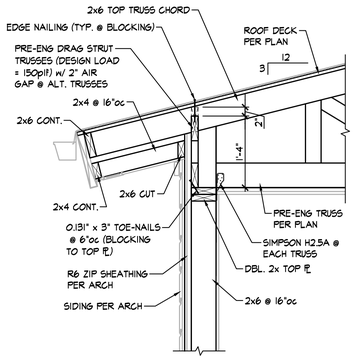

SECTION 4/S4.1
¾" = 1'-0"

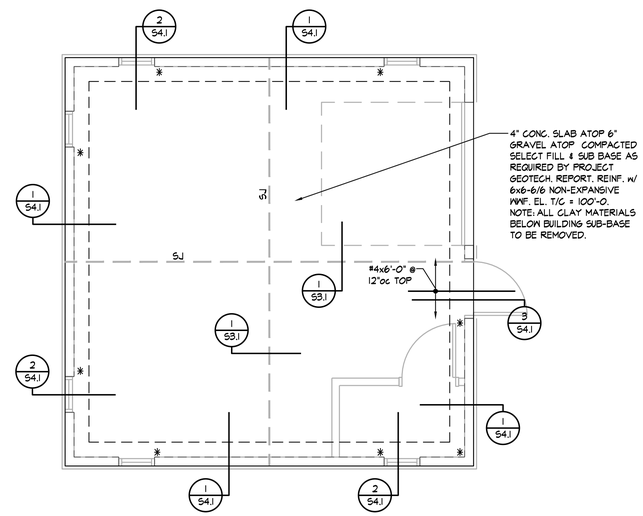

FOUNDATION PLAN - MAINTENANCE BUILDING
¼" = 1'-0"

NOTES:
1. REFER TO GENERAL NOTES ON SHEET S1.0
2. T/C EL. 100'-0"
3. T/FTG. EL. 99'-2" U.N.O.
4. REFER TO ARCHITECTURAL DRAWINGS FOR DIMENSIONS NOT SHOWN
5. REFER TO SHEETS S1.0 AND S1.1 FOR TYPICAL NAILING WOOD FRAMING DETAILS
6. ✳ DENOTES SIMPSON HDU5-SDS2.5 w/ DOUBLE 2x6 STUD & ⅝"x2'-0" Lg. THREADED ROD (DRILL & EPOXY, 8" MIN. INTO FOOTING.

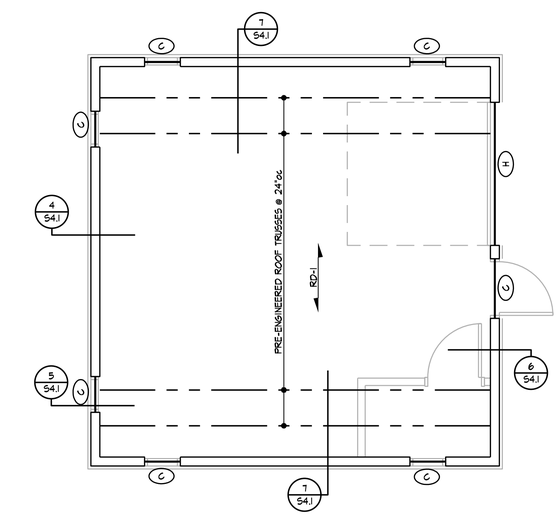

ROOF FRAMING PLAN - MAINTENANCE BUILDING
¼" = 1'-0"

NOTES:
1. REFER TO GENERAL NOTES ON SHEET S1.0
2. REFER TOP HEADER SCHEDULE ON SHEET S1.1
3. REFER TO ARCHITECTURAL DRAWINGS FOR DIMENSIONS NOT SHOWN
4. REFER TO SHEETS S1.0 AND S1.1 FOR TYPICAL NAILING WOOD FRAMING DETAILS
5. "RD-1" DENOTES ⅝" PLYWOOD ROOF DECK

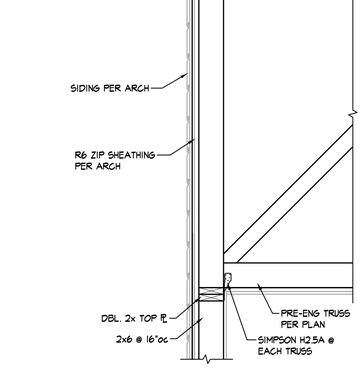

SECTION 5/S4.1
¾" = 1'-0"

SECTION 6/S4.1
¾" = 1'-0"

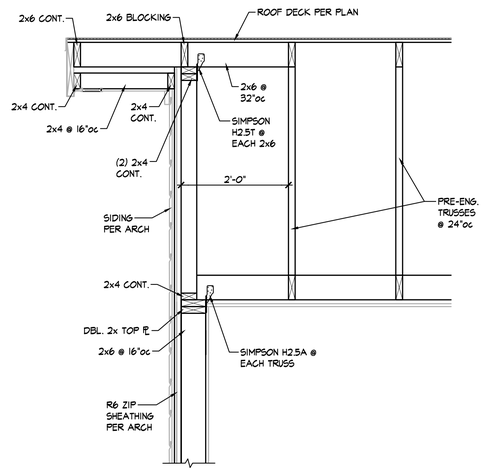

SECTION 7/S4.1
¾" = 1'-0"

BOB D. CAMPBELL & CO.
Structural Engineers Since 1957
4338 Belleview Ave. 816.531.4144
Kansas City, MO 64111 www.bdc-engrs.com

Architects Planners Designers
730 N. Ninth
P.O. BOX 2928
Salina, KS 67402
785.827.0386
1800 Wyandotte St.,
Suite 102
Kansas City, MO 64108
jgr@jgrarchitects.com
JONES GILLAM RENZ

ANGLERS FOUR HUNDRED
APARTMENT COMPLEX
STEAMBOAT SPRINGS, COLORADO

COLORADO LICENSED
JEFFREY LYLE WARD
PROFESSIONAL ENGINEER
5/28/21

DATE: 5-28-2021
JOB: 19-3047
SHEET: S4.1

COPYRIGHTED ©